CUSTOMER DRAWING

PART NO. SEE TABLE "A"

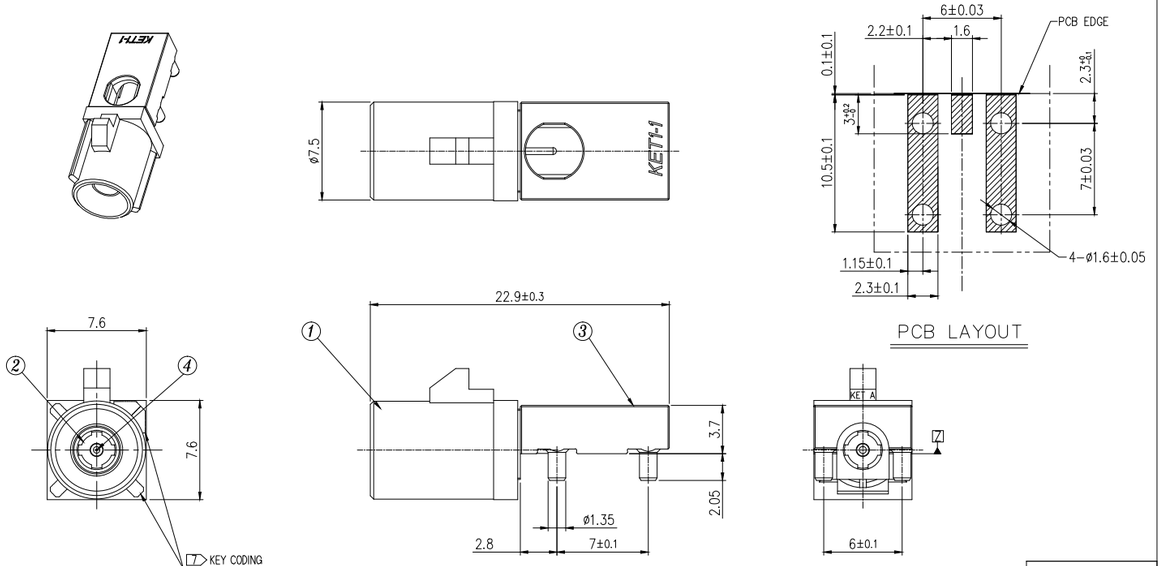

주 기

1. LEAD 평탄도 관리 치수 임.

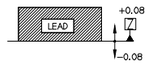

2. CODING KEY는 TABLE "A" 참고할 것
3. 포장 사양 : EMBOSS TAPE(500 EA/REEL)
4. HKMC ES 91500-03 SPEC 에 준할 것.

10 hazardous substances in parts (Lead, Mercury, Cadmium, Hexavalent Chromium, PBBs, PBDEs, DEHP, DIBP, BBP, DIBP) shall not exceed the maximum permissible concentration prescribed under EU ELV Directive & RoHS Regulation.

No.	Part Name	Material	Color	Fnish	Q'ty	Remark
4	CONTACT	BRASS	–	Ni + Au	1	
3	SHELL	ZINC ALLOY	–	Cu + Ni + Sn	1	
2	INSULATOR	PA6T	BLACK	–	1	
1	OUT HOUSING	PA46	SEE TABLE"A"	–	1	

ISSUE MARK

한국단자공업주식회사 출도 2015.12.17 연구개발2팀

LTR	REVISION RECORD	DR. / CHK.	APP.	DATE
DR.	W.J.H 15.12.17	CHK.	K.H.C 15.12.17	
CHK.		APP.	M.S.H 15.12.17	

MATERIAL
FINISH SEE NOTE
WIRE RANGE
INSULATION

TOLERANCE EXCEPT AS NOTED ±0.2 | SCALE 4:1

PART NO. SEE TABLE "A"

KET ENGINEERED KOREA ELECTRIC TERMINAL CO., LTD.

CLASS RF CONN"

TYPE PCB CUT SMD Type

PART NAME FAKRA SD WAFER II 1P ASS'Y (SMD_*)

1 / 2

DESIGN REVISION NO. 0

DIMENSIONS IN MM

CUSTOMER DRAWING

PART NO. SEE TABLE "A"

FAKRA SD WAFER II 1P TYPE LINE UP

CODING		COLOR	PART No.	PART Name.	AVAILABLE CODING
	A	BLACK	KR15013-SA	FAKRA SD WAFER II 1P ASSY (SMD_A)	O
	B	WHITE	KR15013-SB	FAKRA SD WAFER II 1P ASSY (SMD_B)	O
	C	BLUE	KR15013-SC	FAKRA SD WAFER II 1P ASSY (SMD_C)	O
	D	BORDEAUX VIOLET	KR15013-SD	FAKRA SD WAFER II 1P ASSY (SMD_D)	O
	E	GREEN	KR15013-SE	FAKRA SD WAFER II 1P ASSY (SMD_E)	O
	F	BROWN	KR15013-SF	FAKRA SD WAFER II 1P ASSY (SMD_F)	O
	G	GRAY	KR15013-SG	FAKRA SD WAFER II 1P ASSY (SMD_G)	O
	H	VIOLET	-	-	-
	I	BEIGE	KR15013-SI	FAKRA SD WAFER II 1P ASSY (SMD_I)	O
	K	CURRY	KR15013-SK	FAKRA SD WAFER II 1P ASSY (SMD_K)	O
	L	CARMINE RED	KR15013-SL	FAKRA SD WAFER II 1P ASSY (SMD_L)	O
	M	PASTEL ORANGE	KR15013-SM	FAKRA SD WAFER II 1P ASSY (SMD_M)	O
	N	PASTEL GREEN	KR15013-SN	FAKRA SD WAFER II 1P ASSY (SMD_N)	O
	Z	WATER BLUE	KR15013-SZ	FAKRA SD WAFER II 1P ASSY (SMD_Z)	O

TABLE "A"

APPROVED 2020.12.24 KOREA ELECTRIC TERMINAL CO., LTD. Korea Electric Terminal Co.,LTD.

ISSUE MARK

LTR	REVISION RECORD	DR. / CHK.	APP.	DATE
DR.	W.J.H 15.12.17	CHK.	K.H.C 15.12.17	
CHK.		APP.	M.S.H 15.12.17	

MATERIAL
FINISH SEE NOTE
WIRE RANGE
INSULATION

TOLERANCE EXCEPT AS NOTED ±0.2 | SCALE 4:1

PART NO. SEE TABLE "A"

KET ENGINEERED KOREA ELECTRIC TERMINAL CO., LTD.

CLASS RF CONN"

TYPE PCB CUT SMD Type

PART NAME FAKRA SD WAFER II 1P ASS'Y (SMD_*)

2 / 2

DIMENSIONS IN MM