CUSTOMER DRAWING

PART NO. SEE TABLE "A"

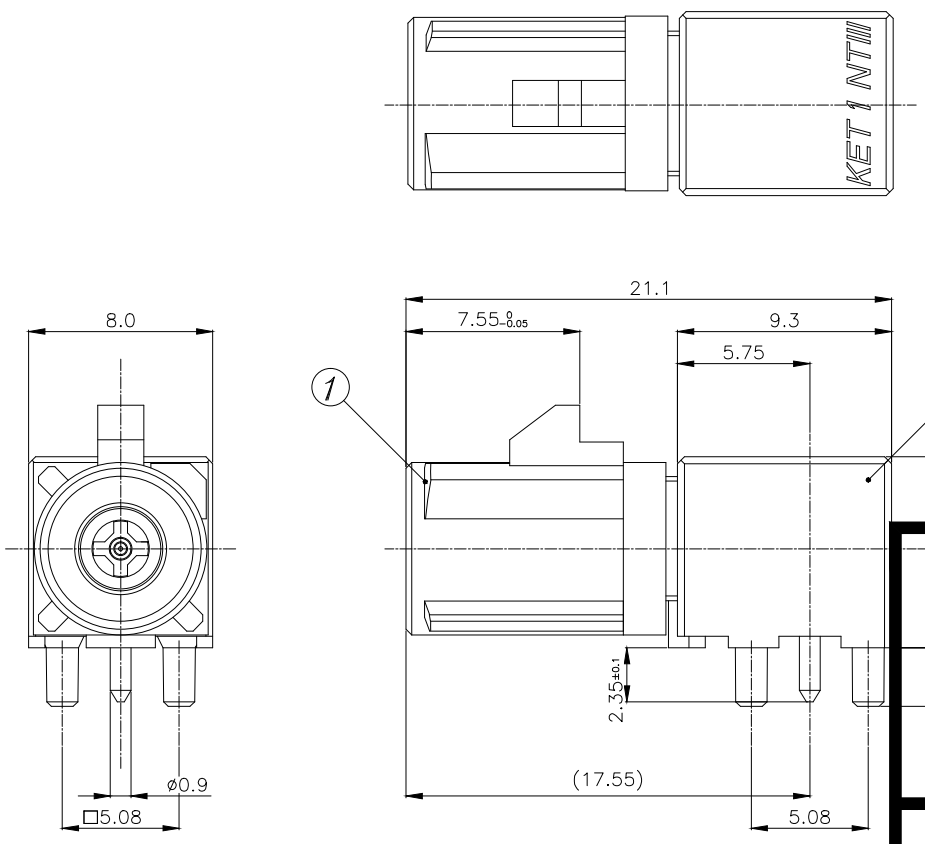

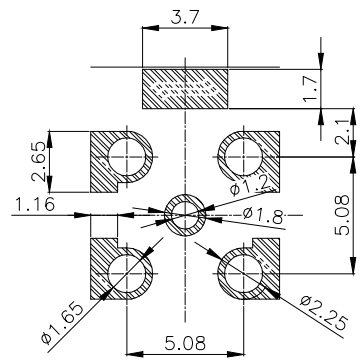

PCB LAYOUT
General Tolweance: ±0.05

APPROVED
2019-11-06
KOREA ELECTRIC TERMINAL CO., LTD.
Korea Electric Terminal Co., LTD.

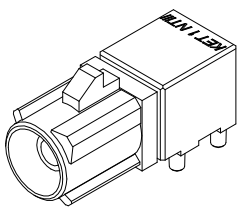

ISO-VIEW

- NOTE -
1. 포장 사양: REEL PACKING.
2. HKMC ES 91500-03 SPEC 에 준할 것.
3. "6 hazardous substances in parts (Lead, Mercury, Cadmium, Hexavalent Chromium, PBBs, PBDEs) shall not exceed the maximum permissible concentration prescribed under EU ELV Directive & RoHS Regulation."

NO.	PART NAME	PART NO	MATERIAL	FINISH	Q'TY
4	CONTACT	[illegible]	[illegible]	Ni + Au	1
3	SHELL	[illegible]	[illegible]	Cu + Ni + Sn	1
2	INSULATOR	K100366-50	POLYAMIDE	UL94-V0, BLACK	1
1	[illegible]	[illegible]	[illegible]	[illegible]	1

ISSUE MARK

MATERIAL
FINISH –
WIRE RANGE
INSULATION
TOLERANCE EXCEPT AS NOTED ±0.2
SCALE 1/1
CLASS F
TYPE FAKRA
PART NO. SEE TABLE "A"
PART NAME FKARA NT WAFER III ASS'Y(DIP_*) 1/2

KOREA ELECTRIC TERMINAL CO., LTD.

LTR	REVISION RECORD	DR./CHK.	APP.	DATE
DR.	K.J.M 16'.02.23	CHK.	K.H.C 16'.02.23	
CHK.		APP.	M.S.H 16'.02.23	

DESIGN REVISION NO. 1

(DIMENSIONS IN MM)

CUSTOMER DRAWING

PART NO. SEE TABLE "A"

FAKRA NT WAFER III DIP TYPE LINE UP

CODING		COLOR	PART No.	PART Name.	AVAILABLE CODING
	A	BLACK	KR15015-DA	FAKRA NT WAFER III ASS'Y(DIP_A)	O
	B	WHITE	KR15015-DB	FAKRA NT WAFER III ASS'Y(DIP_B)	O
	C	BLUE	KR15015-DC	FAKRA NT WAFER III ASS'Y(DIP_C)	O
	D	BORDEAUX VIOLET	KR15015-DD	FAKRA NT WAFER III ASS'Y(DIP_D)	O
	E	GREEN	KR15015-DE	FAKRA NT WAFER III ASS'Y(DIP_E)	O
	F	BROWN	KR15015-DF	FAKRA NT WAFER III ASS'Y(DIP_F)	O
	G	GRAY	-	-	-
	H	VIOLET	-	-	-
	I	BEIGE	KR15015-DI	FAKRA NT WAFER III ASS'Y(DIP_I)	O
	K	CURRY	KR15015-DK	FAKRA NT WAFER III ASS'Y(DIP_K)	O
	L	CARMINE RED	-	-	-
	M	PASTEL ORANGE	KR15015-DM	FAKRA NT WAFER III ASS'Y(DIP_M)	O
	N	PASTEL GREEN	-	-	-
	Z	WATER BLUE	KR15015-DZ	FAKRA NT WAFER III ASS'Y(DIP_Z)	O

"6 hazardous substances in parts (Lead, Mercury, Cadmium, Hexavalent Chromium, PBBs, PBDEs) shall not exceed the maximum permissible concentration prescribed under EU ELV Directive & RoHS Regulation."

TABLE "A"

ISSUE MARK

MATERIAL
FINISH –
WIRE RANGE
INSULATION
TOLERANCE EXCEPT AS NOTED ±0.2
SCALE 1/1
CLASS RF
TYPE FAKRA
PART NO. SEE TABLE "A"
PART NAME FKARA NT WAFER III ASS'Y(DIP_*) 2/2

KOREA ELECTRIC TERMINAL CO., LTD.

LTR	REVISION RECORD	DR./CHK.	APP.	DATE
DR.	K.J.M 16'.02.23	CHK.	K.H.C 16'.02.23	
CHK.		APP.	M.S.H 16'.02.23	

DESIGN REVISION NO. 1

(DIMENSIONS IN MM)