CUSTOMER DRAWING

PART NO. SEE TABLE "A"

GENERAL TOLERANCE (HOUSING)							USED ON
10MAX	50MAX	100MAX	250MAX	250VR	ANGLE	ECCENT	
±0.2	±0.3	±0.55	±0.95	±1.4	±30'	0.1	

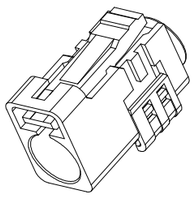

ISOMETRIC VIEW

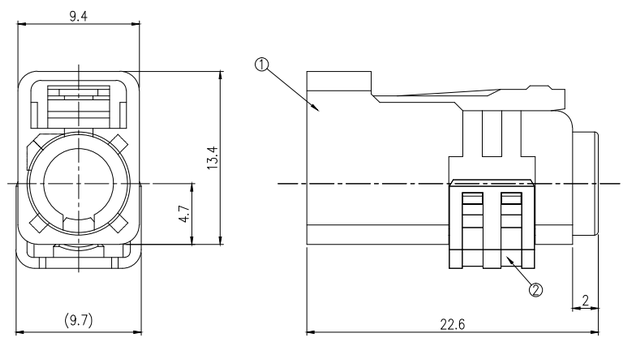

주 기

1. 기능상 유해한 흠, 변형 및 BURR가 없을 것.
2. 제품 LINE UP 및 CODING KEY는 TABLE "A" 를 참고할 것.
3. HKMC ES 96200-03 SPEC 에 준할 것.
4. 적용 부품 : KR20201-20(JACK OUTER CONTACT - ø3)
   KR20201-30(JACK OUTER CONTACT - ø5)
   KR20203-20(JACK II OUTER CONTACT - ø3)

"6 hazardous substances in parts (Lead, Mercury, Cadmium, Hexavalent Chromium, PBBs, PBDEs) shall not exceed the maximum permissible concentration prescribed under EU ELV Directive & RoHS Regulation."

No.	Part Name	Material	Color	Fnish	Q'ty	Remark
2	LOCK HOUSING	PBT	B-VIOLET	-	1	
1	OUT HOUSING	PBT	SEE TABLE"A"	-	1	

ISSUE MARK

LTR	REVISION RECORD	DR.	CHK.	APP.	DATE
⚠	코팅 추가 (H,N)	kmc	hjh	khc	20.04.01
⚠	RELEASE	pjm	jhc	ttrk	14.05.13

DR. P.J.M 14.03.25 CHK. K.H.C 14.03.25
CHK. APP. S/M/K 14.03.25

MATERIAL
FINISH SEE NOTE
WIRE RANGE
INSULATION
TOLERANCE EXCEPT AS NOTED
SCALE 4:1
PART NO. SEE TABLE "A"

KET ENGINEERED KOREA ELECTRIC TERMINAL CO., LTD.
CLASS RF CONN"
TYPE W TO B (W)
PART NAME FAKRA STRAIGHT SINGLE JACK HOUSING _"
1 / 2

DIMENSIONS IN (MM)

CUSTOMER DRAWING

PART NO. SEE TABLE "A"

FAKRA STRAIGHT SINGLE JACK

	CODING		COLOR	Part No.	Part Name.	AVAILABLE CODING
		A	BLACK	KR21101-0A	FAKRA STRAIGHT SINGLE JACK HOUSING _A	O
		B	WHITE	KR21101-0B	FAKRA STRAIGHT SINGLE JACK HOUSING_B	O
		C	BLUE	KR21101-0C	FAKRA STRAIGHT SINGLE JACK HOUSING_C	O
		D	BORDEAUX VIOLET	KR21101-0D	FAKRA STRAIGHT SINGLE JACK HOUSING_D	O
		E	GREEN	KR21101-0E	FAKRA STRAIGHT SINGLE JACK HOUSING_E	O
		F	BROWN	KR21101-0F	FAKRA STRAIGHT SINGLE JACK HOUSING_F	O
		G	GRAY	KR21101-0G	FAKRA STRAIGHT SINGLE JACK HOUSING_G	O
⚠		H	VIOLET	KR21101-0H	FAKRA STRAIGHT SINGLE JACK HOUSING_H	O
		I	BEIGE	KR21101-0I	FAKRA STRAIGHT SINGLE JACK HOUSING_I	O
		K	CURRY	KR21101-0K	FAKRA STRAIGHT SINGLE JACK HOUSING_K	O
		L	CARMINE RED	KR21101-0L	FAKRA STRAIGHT SINGLE JACK HOUSING_L	O
		M	PASTEL ORANGE	KR21101-0M	FAKRA STRAIGHT SINGLE JACK HOUSING_M	O
⚠		N	PASTEL GREEN	KR21101-0N	FAKRA STRAIGHT SINGLE JACK HOUSING_N	O
		Z	WATER BLUE	KR21101-0Z	FAKRA STRAIGHT SINGLE JACK HOUSING_Z	O

"6 hazardous substances in parts (Lead, Mercury, Cadmium, Hexavalent Chromium, PBBs, PBDEs) shall not exceed the maximum permissible concentration prescribed under EU ELV Directive & RoHS Regulation."

APPROVED
2021-01-07
KOREA ELECTRIC TERMINAL CO., LTD.
Korea Electric Terminal Co., LTD.

ISSUE MARK

TABLE "A"

LTR	REVISION RECORD	DR.	CHK.	APP.	DATE
⚠	코팅 추가 (H,N)	kmc	hjh	khc	20.04.01
⚠	RELEASE	pjm	jhc	ttrk	14.05.13

DR. P.J.M 14.03.25 CHK. K.H.C 14.03.25
CHK. APP. S/M/K 14.03.25

MATERIAL
FINISH SEE NOTE
WIRE RANGE
INSULATION
TOLERANCE EXCEPT AS NOTED
SCALE 4:1
PART NO. SEE TABLE "A"

KET ENGINEERED KOREA ELECTRIC TERMINAL CO., LTD.
CLASS RF CONN"
TYPE W TO B (W)
PART NAME FAKRA STRAIGHT SINGLE JACK HOUSING _"
2 /2

DIMENSIONS IN (MM)