PART NO. MG610012

CUSTOMER DRAWING

GENERAL TOLERANCE (HOUSING)							USED ON
10MAX	50MAX	100MAX	250MAX	250VR	ANGLE	ECCENT	
±0.2	±0.3	±0.55	±0.95	±1.4	±30'	0.1	

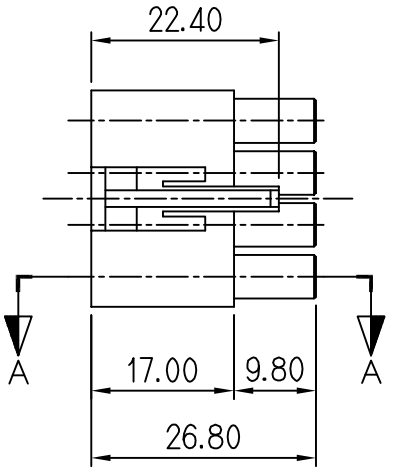

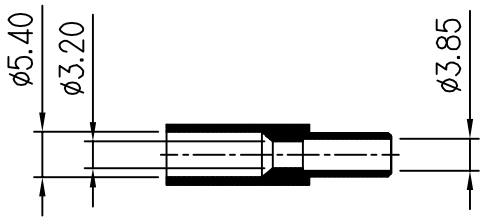

SECTION 'A-A'

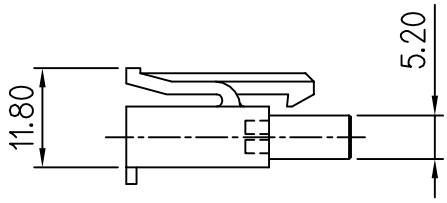

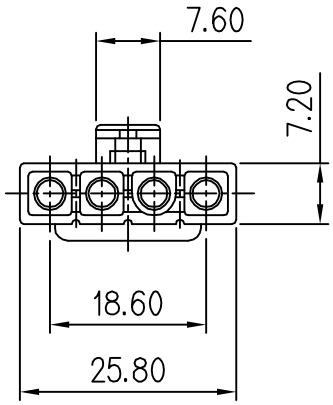

주 기

1.기능상 유해한 FLASH, SINK,WELDLINE 등이 없을것.
2.적용 TERMINAL: ST730205-3, 730206-3
730349-3, 730329-3
3.적용 HOUSING: MG620011
4.제품내 함유된 6대 유해물질 (납,수은,카드뮴,6가크롬,
PBBs,PBDEs)은 EU ELV 지침 및 RoHS 법규에서
지정한 최대 허용 농도를 초과해서는 안된다.

NOTE

1. MUST BE FREE OF FLASH, SINK,WELDLINE
AND IMPERFECTION THAT AFFECT FUNCTION.
2. APPLICABLE TERMINAL : ST730205-3, 730206-3
730349-3, 730329-3
3. APPLICABLE HOUSING: MG620011
4. 6 HAZARDOUS SUBSTANCES IN PARTS (LEAD,MERCURY,
CADMIUM,HEXAVALENT CHROMIUM,PBBs,PBDEs) SHALL
NOT EXCEED THE MAXIMUM PERMISSIBLE CONCENTRATION
PRESCRIBED UNDER EU ELV DIRECTIVE & RoHS REGULATION.

(DIMENSIONS IN MM)

ISSUE MARK

LTR	REVISION RECORD	DR. / CHK.	APP.	DATE
1	설계사양변경(S110128)근거 도면 재작성			'11.04.28

DR. 85 2/10 CHK.
CHK. APP.

MATERIAL	NYLON	KOREA ELECTRIC TERMINAL CO., LTD.	
FINISH	NATURAL		
WIRE RANGE		CLASS	
INSULATION		TYPE	
TOLERANCE EXCEPT AS NOTED	SEE TABLE	SCALE 1/1	PART NO. MG610012
PART NAME	ø2.0 PLUG HOUSING 4P 'A'		