PART NO. MG610014

CUSTOMER DRAWING

GENERAL TOLERANCE (HOUSING)							USED ON
10MAX	50MAX	100MAX	250MAX	250VR	ANGLE	ECCENT	
±0.2	±0.3	±0.55	±0.95	±1.4	±30'	0.1	

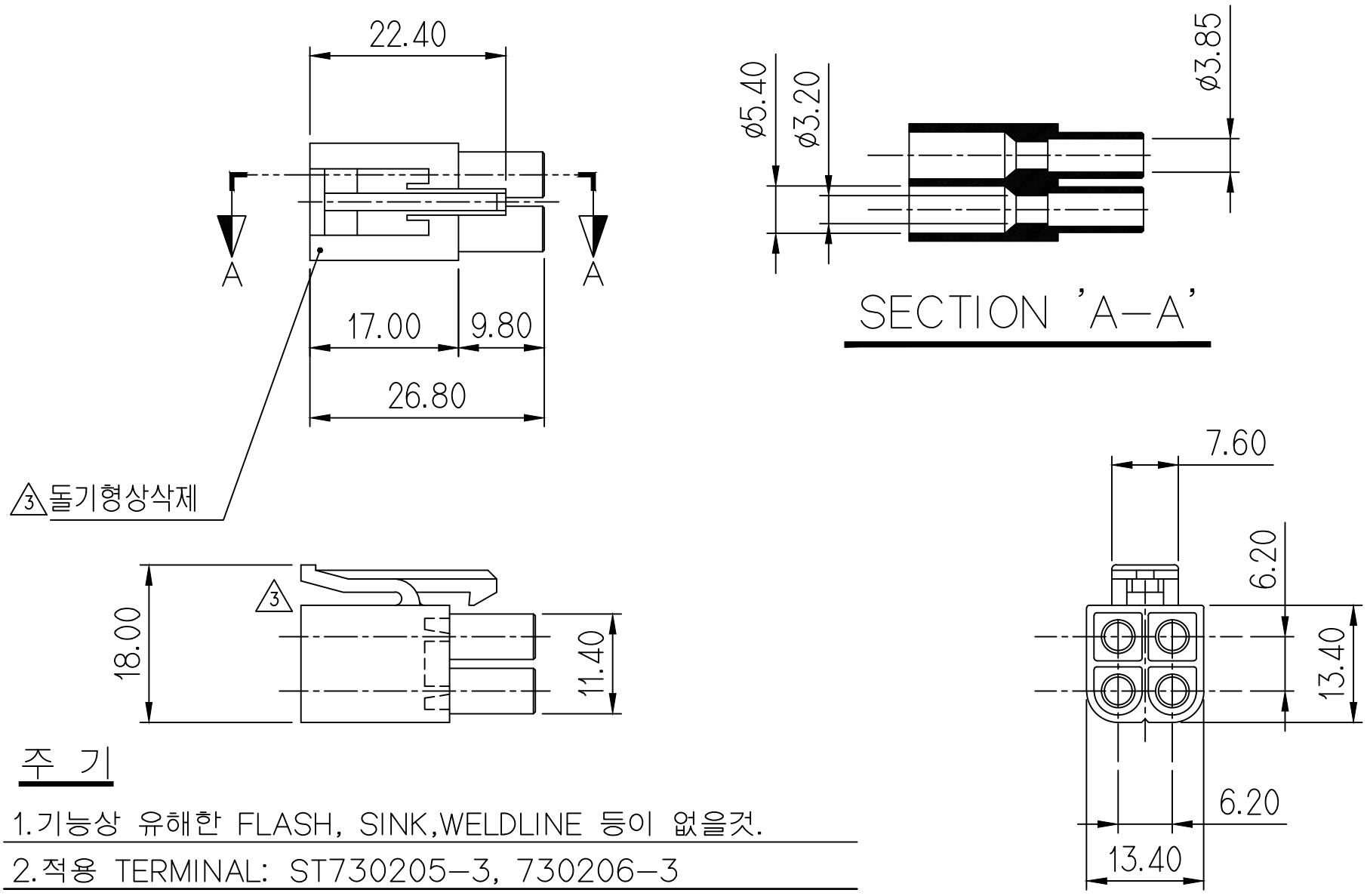

주 기

1.기능상 유해한 FLASH, SINK,WELDLINE 등이 없을것.

2.적용 TERMINAL: ST730205–3, 730206–3
730349–3, 730329–3

3.적용 HOUSING:MG620013

4.제품내 함유된 6대 유해물질 (납,수은,카드뮴,6가크롬, PBBs,PBDEs)은 EU ELV 지침 및 RoHS 법규에서 지정한 최대 허용 농도를 초과해서는 안된다.

NOTE

1. MUST BE FREE OF FLASH, SINK,WELDLINE AND IMPERFECTION THAT AFFECT FUNCTION.
2. APPLICABLE TERMINAL : ST730205–3, 730206–3
730349–3, 730329–3
3. APPLICABLE HOUSING:MG620013
4. 6 HAZARDOUS SUBSTANCES IN PARTS (LEAD,MERCURY, CADMIUM,HEXAVALENT CHROMIUM,PBBs,PBDEs) SHALL NOT EXCEED THE MAXIMUM PERMISSIBLE CONCENTRATION PRESCRIBED UNDER EU ELV DIRECTIVE & RoHS REGULATION.

ISSUE MARK

LTR	REVISION RECORD	DR. / CHK.	APP.	DATE
4	설계사양변경(S110128)근거 도면 재작성			'11.04.28
3	설계사양변경(S080033)근거 수정			'08.02.05
2	명칭변경(전ø2.0 REC. 4P HSG)			'85.11.29
1	제번 변경 (GP880920)			'85.09.13

DR. 85 2/11 CHK.
CHK. APP.

MATERIAL NYLON
FINISH NATURAL
WIRE RANGE
INSULATION

KET ENGINEERED KOREA ELECTRIC TERMINAL CO., LTD.
CLASS GP880926
TYPE

TOLERANCE EXCEPT AS NOTED SEE TABLE
SCALE 1/1
PART NO. MG610014

PART NAME
3 ø2.0 PLUG HOUSING 4P 'B'

(DIMENSIONS IN MM)