도면번호 NUMBER MG 610205

USED ON

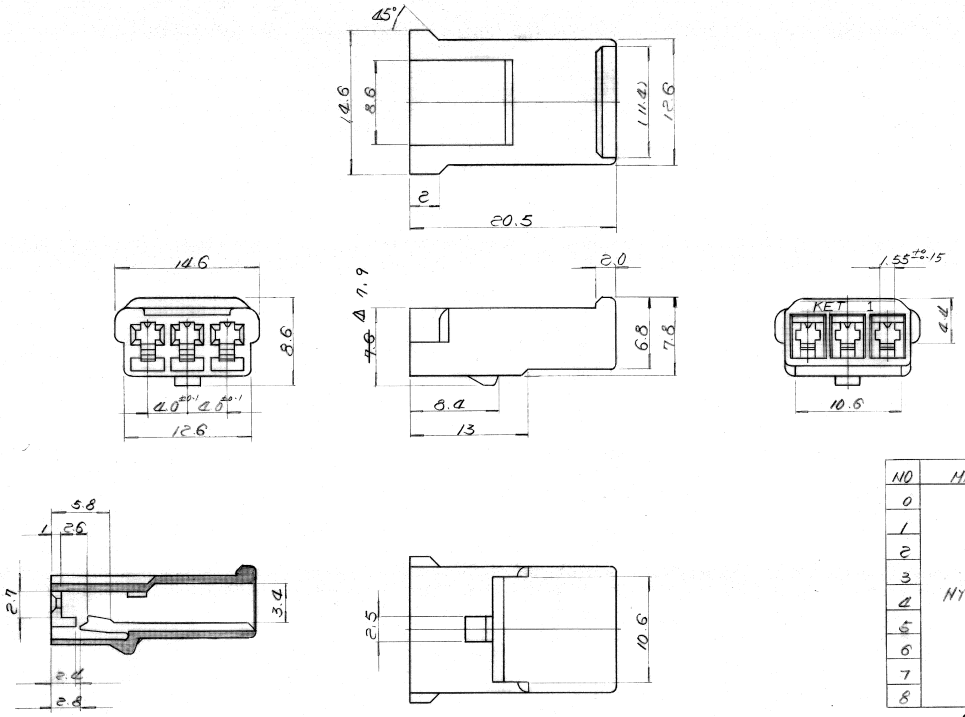

NO	MAT'L	COLOR
0	NYLON	NATURAL
1		RED
2		BLUE
3		YELLOW
4		GRAY
5		BLACK
6		WHITE GREEN
7		BROWN
8		GREEN

단위 : DIMENSIONS IN MM

CUSTOMER DRAWING

LTR	변 경(REVISION RECORD)	DR/CHK	DATE
△	Lock부 높이수정	송용	92 6/30

DR. 89 6 30 DE.
CHK O.W. Kim APP.

재질(MATERIAL): SEE TABLE
표면처리(FINISH): SEE TABLE
전선단면적(WIRE RANGE)
피복외경(INSULATION DIA)
일반공차 (TOLERANCE EXCEPT AS NOTED): ±0.2 ~~±0.3~~
척도(SCALE): 2/1
형식(TYPE): 0129 - 1090
도번(NO.): MG 610205
품명(NAME): 2.3 PLUG KET SP

KET ENGINEERED
KOREA ELECTRIC TERMINAL CO., LTD.

한국단자공업주식회사