NO	METERIAL	COLOR
0	P B T	NATURIAL
1		RED
2		BLUE
3		YELLOW
4		GRAY
5		BLACK
6		W/GREEN
7		BROWN
* 8		GREEN

''는 본래 지정색상 COLOR임.

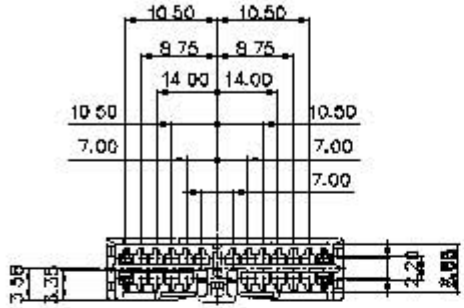

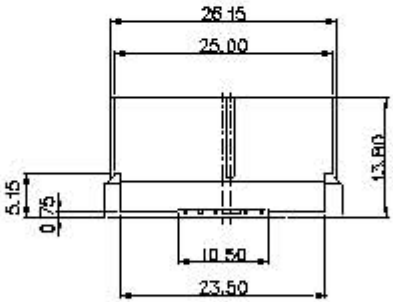

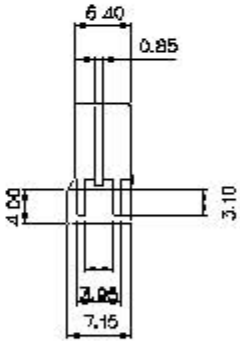

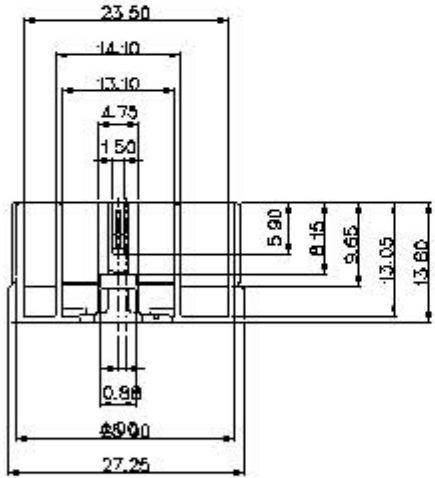

3U II

1. ?OAw TERMINAL:ST730497, ST740498
2. ¼wou HOUSING P/NO: MC621121
3. ¼wou HOUSING P/NO: MC631122

(MATERIAL)	P B T	KET	KOREA ELECTRIC TERMINAL CO., LTD.
(FINISH)	GREEN		
(TOLERANCE)		(SCALE)	
(DESIGNATION)		(UNIT)	
±0.2	(SCALE) 1/1	(No.)	MC611120
(NAME)	SDLII 24P PLUG HOUSING		
JANG	96.11.21		