PART NO. MG611163T

CUSTOMER DRAWING

GENERAL TOLERANCE (HOUSING)							USED ON
10MAX	50MAX	100MAX	250MAX	250VR	ANGLE	ECCENT	
±0.2	±0.3	±0.55	±0.95	±1.4	±30'	0.1	

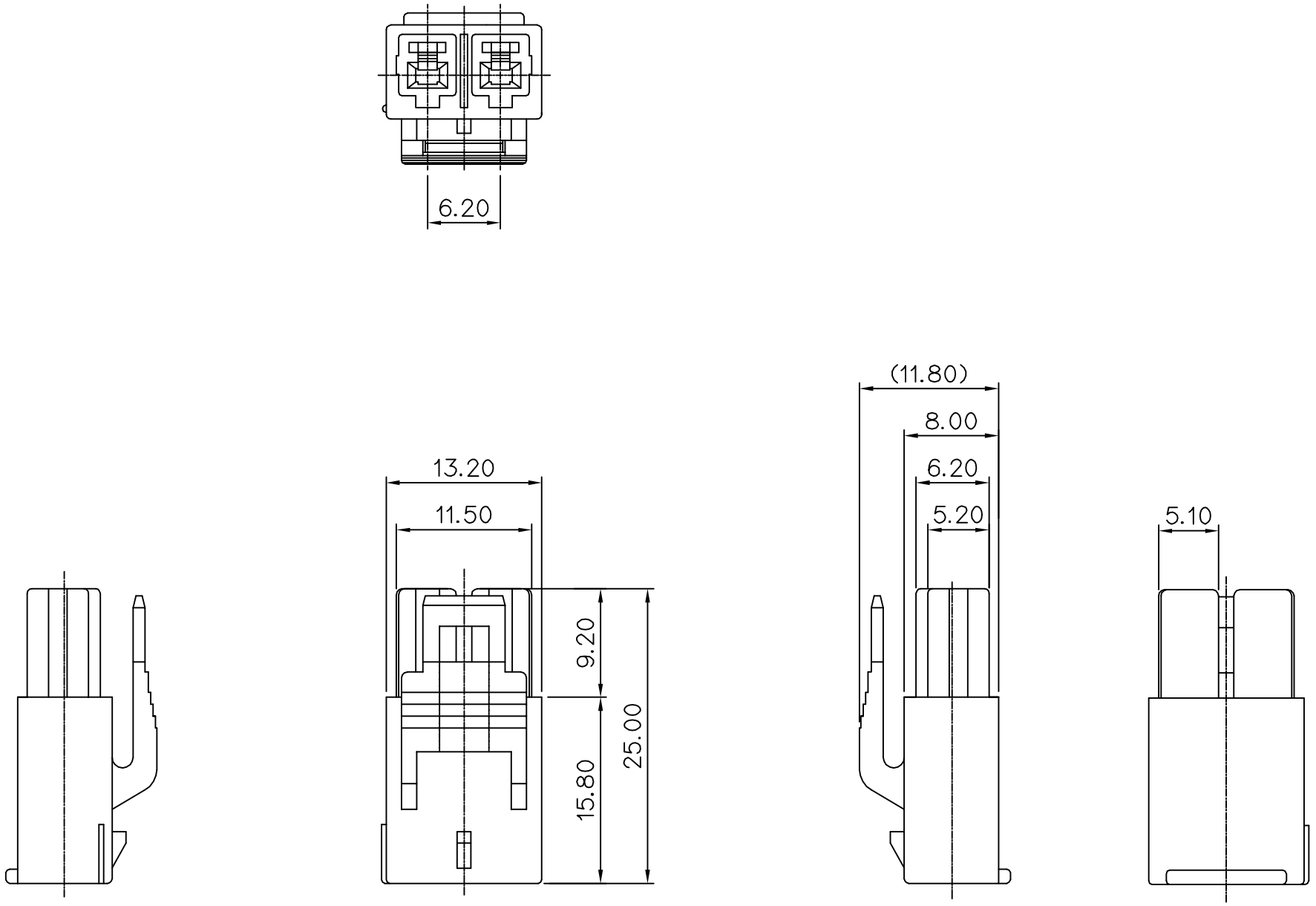

주 기

1.기능상 유해한 FLASH, SINK,WELDLINE 등이 없을것.
2.적용 TERMINAL: ST730694,695,696,697,872-3
3.적용 하우징 : MG621164T,621173T
적용 리홀더 : MG631165
4.제품내 함유된 6대 유해물질 (납,수은,카드뮴,6가크롬, PBBs,PBDEs)은 EU ELV 지침 및 RoHS 법규에서 지정한 최대 허용 농도를 초과해서는 안된다.

NOTE

1. MUST BE FREE OF FLASH, SINK,WELDLINE AND IMPERFECTION THAT AFFECT FUNCTION.
2. APPLICABLE TERMINAL : ST73694,695,696,697,872-3
3. APPLICABLE HS'G : MG621164T,621173T
APPLICABLE REAR HOLDER : MG631165
4. 6 HAZARDOUS SUBSTANCES IN PARTS (LEAD,MERCURY, CADMIUM,HEXAVALENT CHROMIUM,PBBs,PBDEs) SHALL NOT EXCEED THE MAXIMUM PERMISSIBLE CONCENTRATION PRESCRIBED UNDER EU ELV DIRECTIVE & RoHS REGULATION.

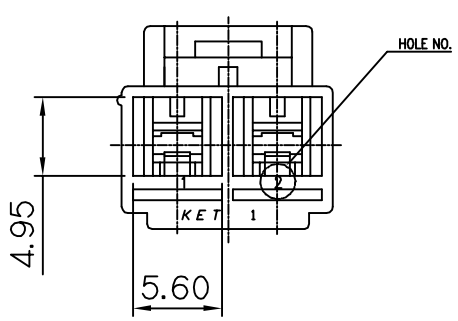

ISSUE MARK

LTR	REVISION RECORD	DR. / CHK.	APP.	DATE
1	ECO-1409-113 근거 도면 제작성	LCM / KSH	BUC	'14.09.19

DR.	LCM	'11.08.10	CHK. KSH '11.08.10
CHK.			APP. BUC '11.08.10

MATERIAL	1 PET+PC(GWIT)	KOREA ELECTRIC TERMINAL CO., LTD.	
FINISH	NATURAL		
WIRE RANGE		CLASS	
INSULATION		TYPE	
TOLERANCE EXCEPT AS NOTED	SEE TABLE	SCALE 2/1	PART NO. MG611163T
PART NAME	1806 D/L 2P PLUG HS'G		

(DIMENSIONS IN MM)