PART NO. MG611468

CUSTOMER DRAWING

GENERAL TOLERANCE (HOUSING)							USED ON
10 MAX	50 MAX	100 MAX	250 MAX	250 VR	ANGLE	ECCENT	
±0.2	±0.3	±0.55	±0.95	±1.4	±30'	0.1	

NOTE

1. MUST BE FREE OF FLASH, SINK,WELDLINE AND IMPERFECTION THAT AFFECT FUNCTION.
2. APPLICABLE TERMINAL : ST730694,695,696,697,872-3
3. APPLICABLE HOUSING : MG621469,621470
4. APPLICABLE R/HOLDER : MG631168-2
5. 6 HAZARDOUS SUBSTANCES IN PARTS (LEAD,MERCURY, CADMIUM,HEXAVALENT CHROMIUM,PBBs,PBDEs) SHALL NOT EXCEED THE MAXIMUM PERMISSIBLE CONCENTRATION PRESCRIBED UNDER EU ELV DIRECTIVE & RoHS REGULATION.

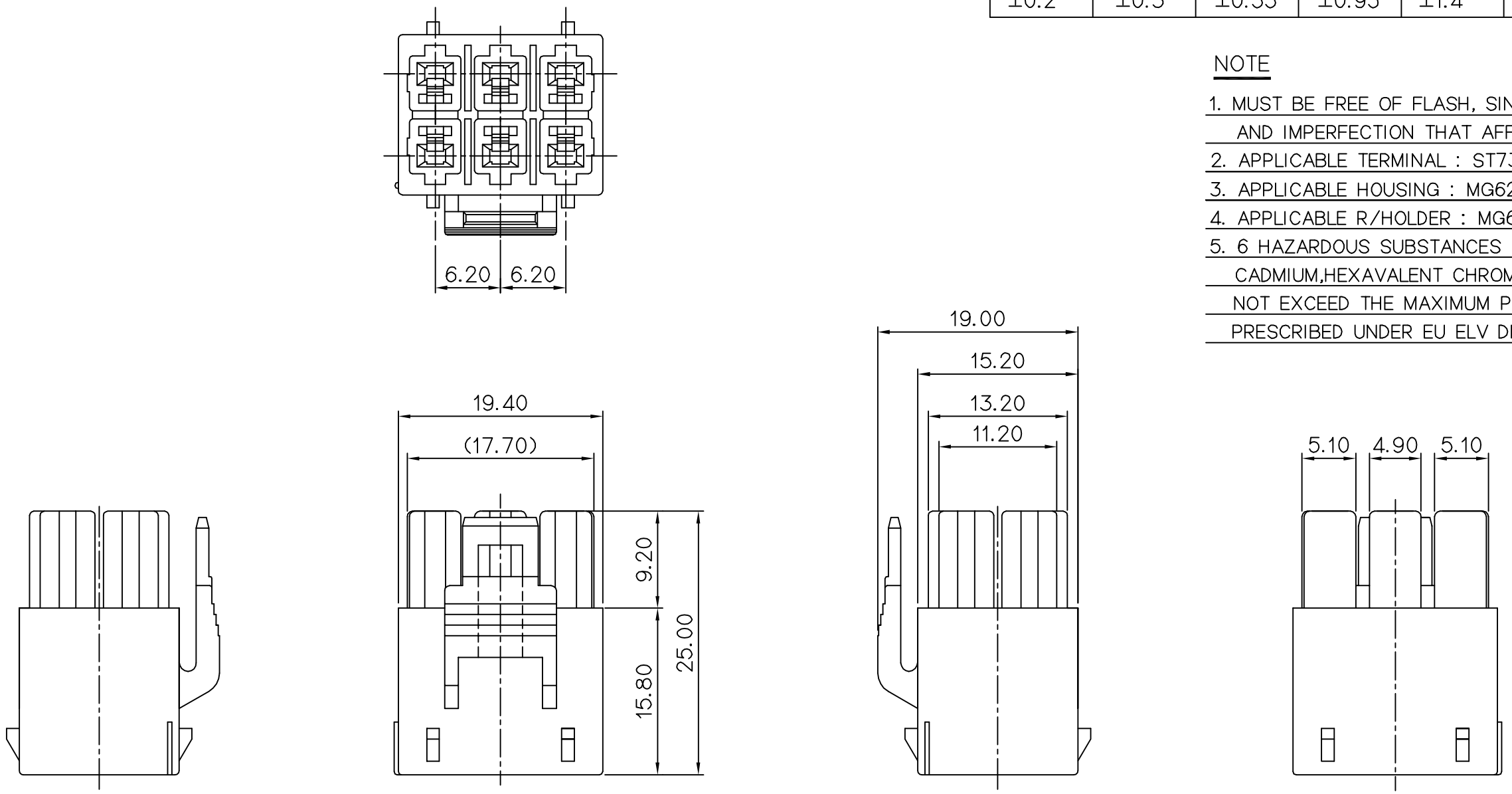

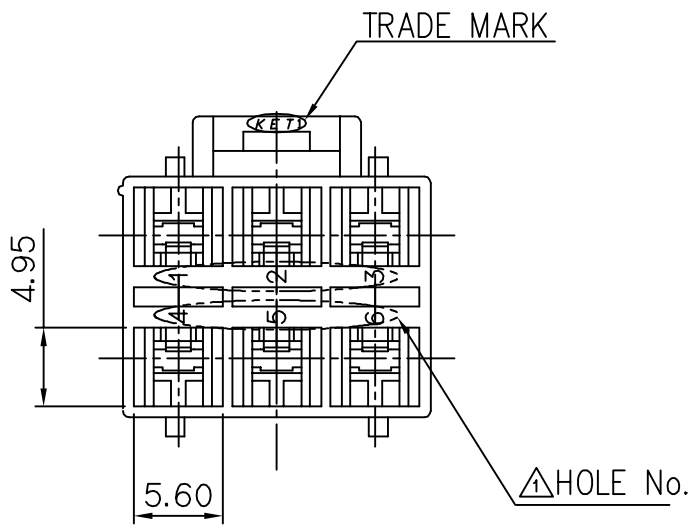

주 기

1.기능상 유해한 FLASH, SINK,WELDLINE 등이 없을것.
2.적용 TERMINAL: ST730694,695,696,697,872-3
3.적용 HOUSING: MG621469,621470
4.적용 R/HOLDER: MG631168-2
5.제품내 함유된 6대 유해물질 (납,수은,카드뮴,6가크롬, PBBs,PBDEs)은 EU ELV 지침 및 RoHS 법규에서 지정한 최대 허용 농도를 초과해서는 안된다.

ISSUE MARK

LTR	REVISION RECORD	DR.	CHK.	APP.	DATE
2	설계사양변경서'S110128'근거 도면제작성	KSH		—	11.04.29
1	시방변경"090289"의거 도면 제작성	PJM			09.09.30

DR. KO 96.07.16 CHK. 6/3 6/5 APP. D:\sign\sign-w.GIF 6/5

MATERIAL PBT (V0)
FINISH NATURAL
WIRE RANGE
INSULATION
TOLERANCE EXCEPT AS NOTED SEE TABLE
SCALE 2/1
PART NAME 1806 D/L 6P PLUG HS'G

KET ENGINEERED KOREA ELECTRIC TERMINAL CO., LTD.
CLASS
TYPE
PART NO. MG611468

(DIMENSIONS IN MM)