PART NO. MG615070

CUSTOMER DRAWING

GENERAL TOLERANCE (HOUSING)							USED ON
10 MAX	50 MAX	100 MAX	250 MAX	250 VR	ANGLE	ECCENT	
±0.2	±0.3	±0.55	±0.95	±1.4	±30'	0.1	

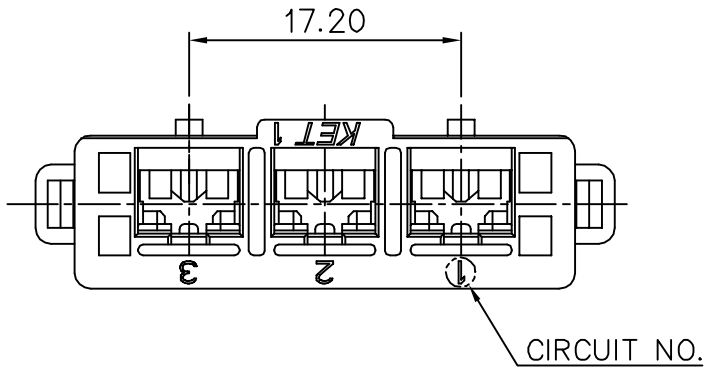

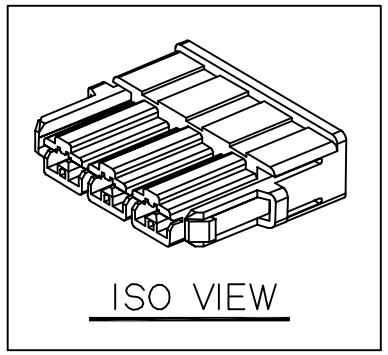

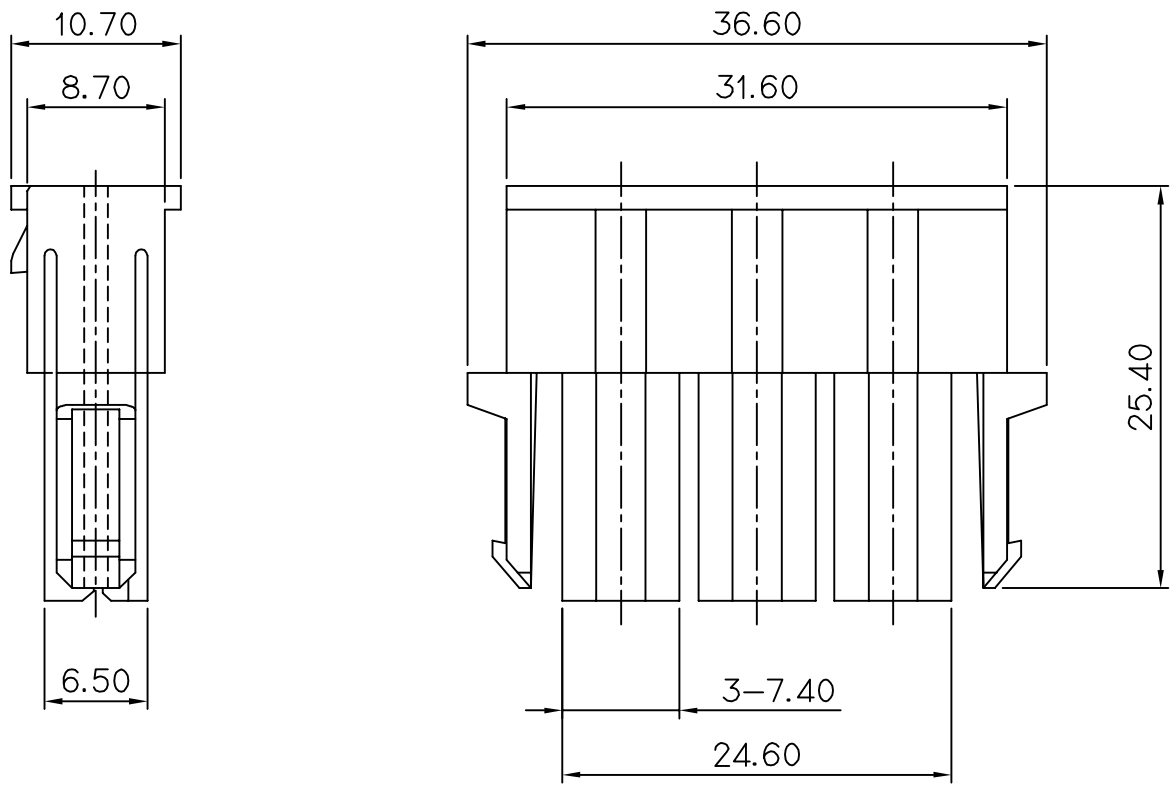

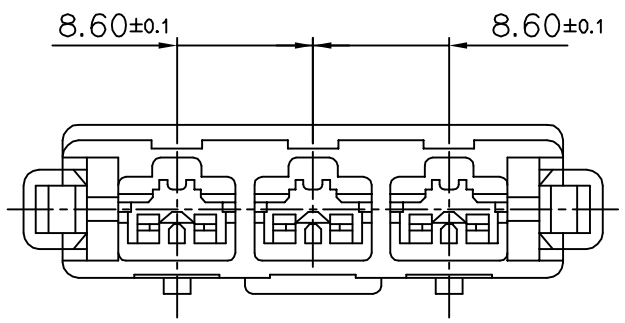

NOTE

1. UNLESS OTHERWISE SPECIFIED ALL RADIUS TO BE 0.2-0.3 RADIUS.
2. MUST BE FREE OF FLASH, WELDLINE AND IMPERFECTION THAT AFFECT FUNCTION.
3. APPLICABLE R/HOLDER : MG635071-1
   APPLICABLE TERMINAL : ST731261,1262-3
4. 6 HAZARDOUS SUBSTANCES IN PARTS (LEAD,MERCURY, CADMIUM,HEXAVALENT CHROMIUM,PBBs,PBDEs) SHALL NOT EXCEED THE MAXIMUM PERMISSIBLE

주 기

1. 지시하지 않은 반경 R은 0.2-0.3로 한다
2. 기능상 유해한 BURR 및 WELDLINE등이 없을 것.
3. 적용 R/HOLDER : MG635071-1
   적용 TERMINAL : ST731261,1262-3
4. 제품내 함유된 6대 유해물질 (납,수은,카드뮴,6가크롬, PBBs,PBDEs)은 EU ELV 지침 및 RoHS 법규에서 지정한 최대 허용 농도를 초과해서는 안된다.

ISSUE MARK

LTR	REVISION RECORD	DR. / CHK.	APP.	DATE

DR. KSH. '2010.05.12 CHK. 5/12
CHK. APP. 5/12

MATERIAL	PA66(V0)	KET ENGINEERED	KOREA ELECTRIC TERMINAL CO., LTD.
FINISH	NATURAL		
WIRE RANGE		CLASS	187
INSULATION		TYPE	P-LOCK
TOLERANCE EXCEPT AS NOTED SEE TABLE	SCALE 2/1	PART NO.	MG615070
PART NAME 187 3F HOUSING			

(DIMENSIONS IN MM)