PART NO. MG615562

CUSTOMER DRAWING

GENERAL TOLERANCE (HOUSING)							USED ON
10MAX	50MAX	100MAX	250MAX	250VR	ANGLE	ECCENT	
±0.2	±0.3	±0.55	±0.95	±1.4	±30'	0.1	

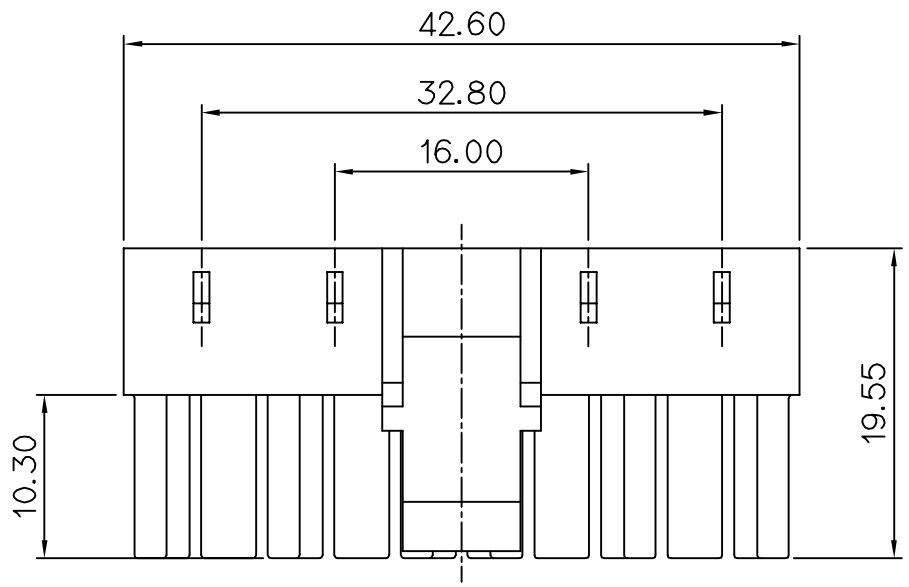

NOTE

1. MUST BE FREE OF FLASH, SINK AND IMPERFECTION THAT AFFECT FUNCTION.
2. 6 HAZARDOUS SUBSTANCES IN PARTS (LEAD,MERCURY, CADMIUM,HEXAVALENT CHROMIUM,PBBs,PBDEs) SHALL NOT EXCEED THE MAXIMUM PERMISSIBLE CONCENTRATION PRESCRIBED UNDER EU ELV DIRECTIVE & RoHS REGULATION.
3. APPLICABLE R/HOLDER : MG635620
4. APPLICABLE TERMINAL : ST731171,1172

주 기

1.기능상 유해한 FLASH, SINK, 미성형 등이 없을 것.
2.제품내 함유된 6대 유해물질 (납,수은,카드뮴,6가크롬, PBBs,PBDEs)은 EU ELV 지침 및 RoHS 법규에서 지정한 최대 허용 농도를 초과해서는 안된다.
3.적용 R/HOLDER : MG635620
4.적용 TERMINAL: ST731171,1172

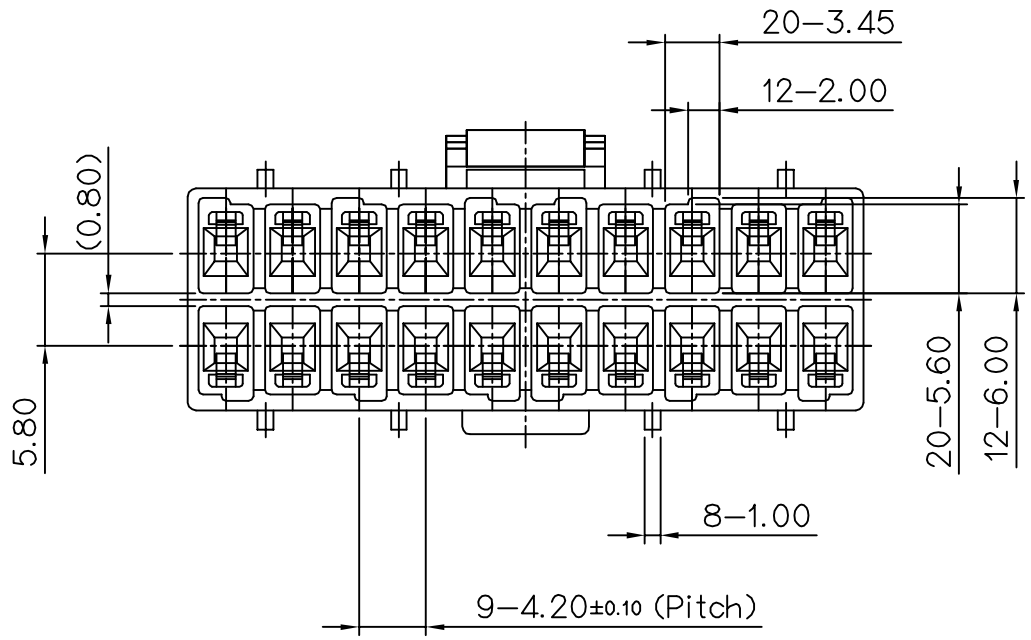

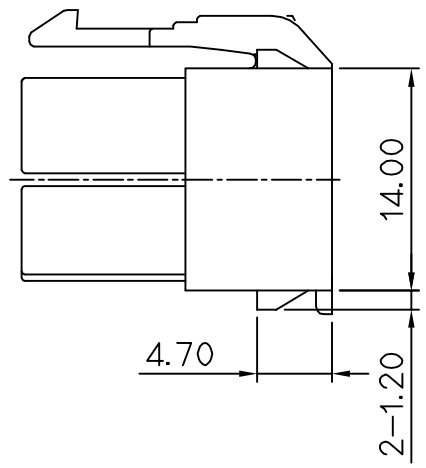

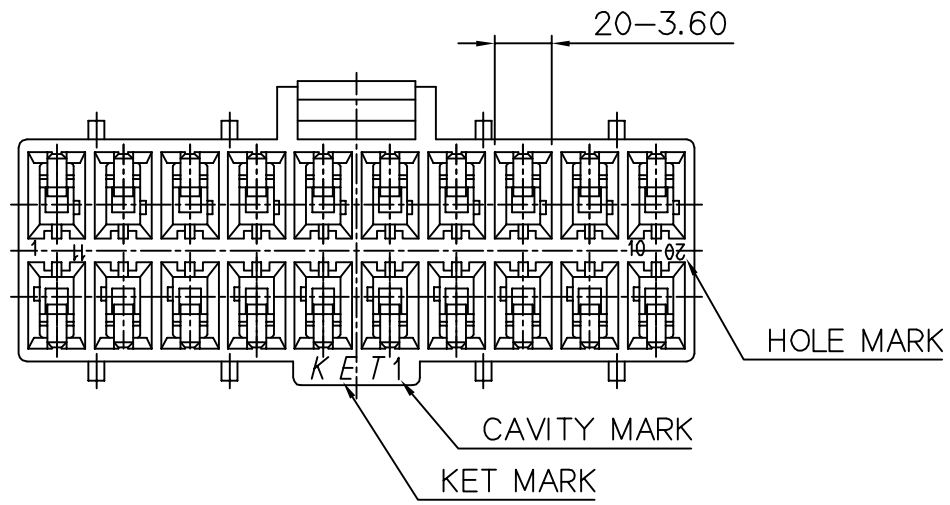

ISSUE MARK

LTR	REVISION RECORD	DR. / CHK.	APP.	DATE

DR.	PSH. 12.10.15	CHK.	
CHK.	KSH. 12.10.15	APP.	BUC. 12.10.15

MATERIAL	PET+PC(GWIT)	KIET ENGINEERED	KOREA ELECTRIC TERMINAL CO., LTD.
FINISH	NATURAL		
WIRE RANGE		CLASS	NEW 050
INSULATION		TYPE	
TOLERANCE EXCEPT AS NOTED SEE TABLE	SCALE 2/1	PART NO.	MG615562
PART NAME	NEW 050 20F HOUSING		

(DIMENSIONS IN MM)