PART NO. MG620145T-*10

CUSTOMER DRAWING

(DIMENSIONS IN MM)

GENERAL TOLERANCE (HOUSING)					USED ON
10MAX	50MAX	100MAX	100VR	( )	
±0.25	±0.35	±0.55	±0.95	±1.0	

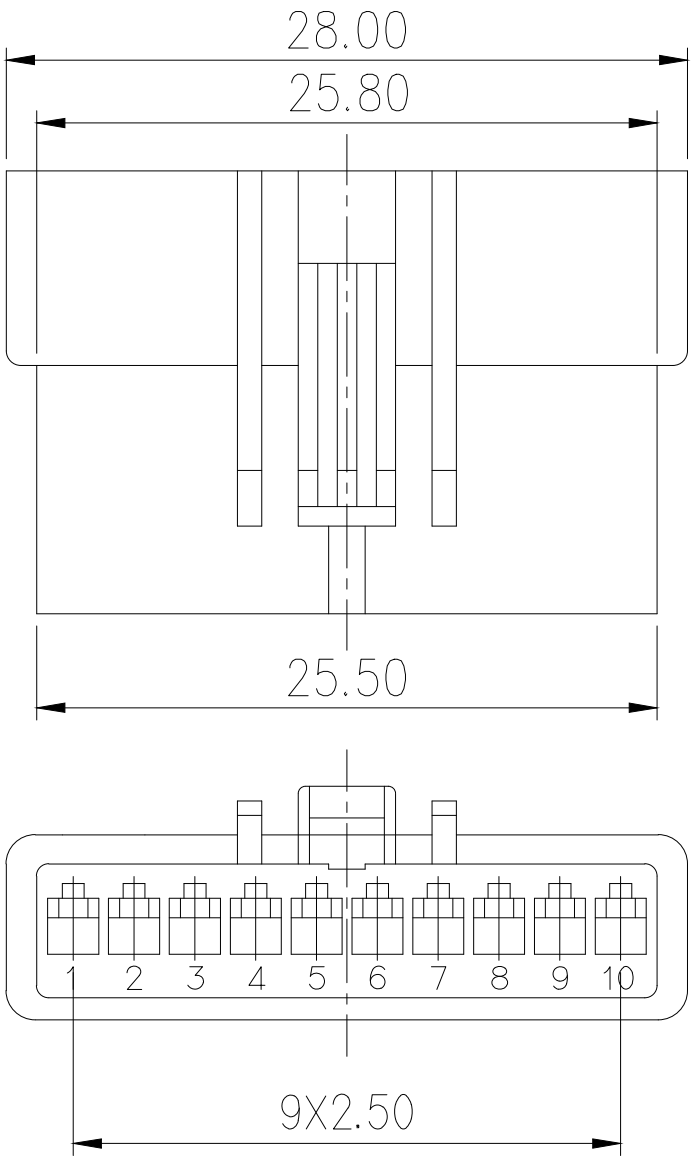

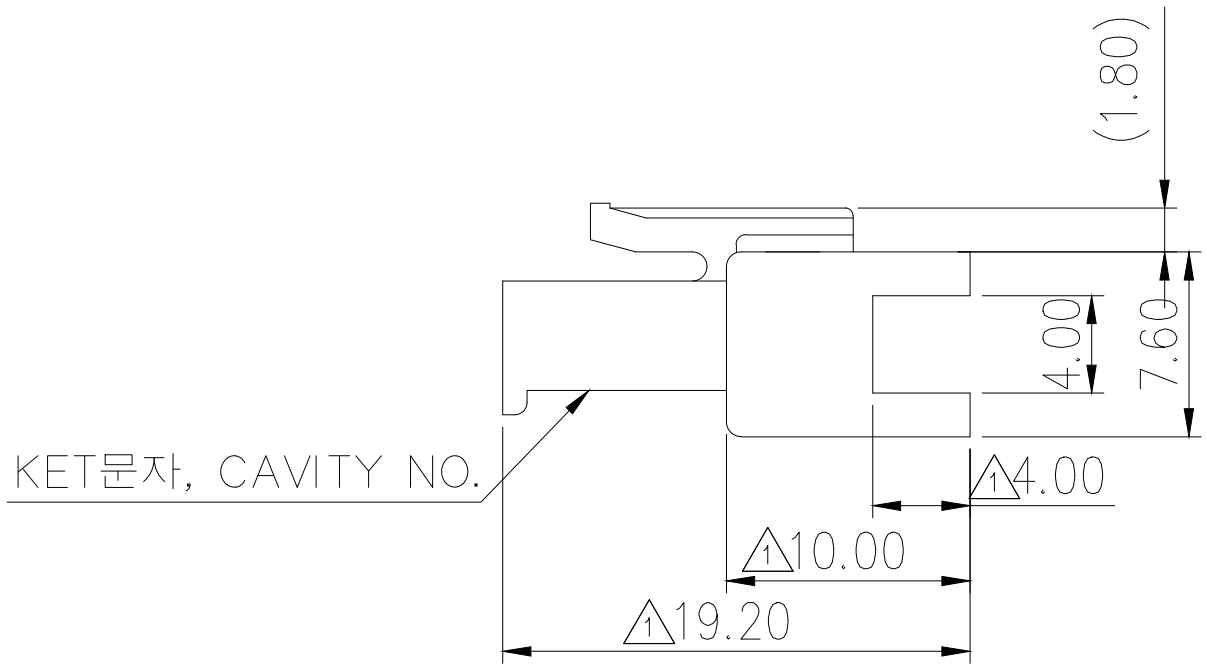

주 기

1.기능상 유해한 FLASH, BURR, WELDLINE 없을 것
2.지시하지 않은 모든 R은 0.3R.
3.적용 HOUSING : MG610144T-*10
적용 TERMINAL : ST730335-3
4.제품내 함유된 6대 유해물질 (납,수은,카드뮴,6가크롬, PBBs,PBDEs)은 EU ELV 지침 및 RoHS 법규에서 지정한 최대 허용 농도를 초과해서는 안된다.

NOTE

1. MUST BE FREE OF FLASH, BURR, WELDLINE AND IMPERFECTION THAT AFFECT FUNCTION.
2. UNLESS OTHERWISE SPECIFIED ALL RADIUS TO BE 0.3 RADIUS.
3. APPLICABLE HOUSING : MG610144T-*10
APPLICABLE TERMINAL : ST730335-3
4. 6 HAZARDOUS SUBSTANCES IN PARTS (LEAD,MERCURY, CADMIUM,HEXAVALENT CHROMIUM,PBBs,PBDEs) SHALL NOT EXCEED THE MAXIMUM PERMISSIBLE CONCENTRATION PRESCRIBED UNDER EU ELV DIRECTIVE & RoHS REGULATION.

PART NO. *표시는 색상 표기임.

	NO.	COLOR
*	0	NATURAL
	1	RED
	2	BLUE
	3	YELLOW
	4	GRAY
	5	BLACK
	6	GREEN

APPROVED
2019-11-06
KOREA ELECTRIC TERMINAL CO., LTD. Electronic Produc t Development Team

ISSUE MARK

LTR	REVISION RECORD	DR. / CHK.	APP.	DATE
△1	ECO-1802-067 의거 도면 재작성	LYS / KSH	BUC	18.02.05

DR. LYS '17.11.01 CHK. PSH '17.11.01
CHK. KSH '17.11.01 APP. BUC '17.11.01

MATERIAL PET+PC(GWIT)
FINISH SEE TABLE
WIRE RANGE
INSULATION
TOLERANCE EXCEPT AS NOTED SEE TABLE
SCALE 2/1
PART NAME 1006 10M HOUSING

KET ENGINEERED KOREA ELECTRIC TERMINAL CO., LTD.
CLASS
TYPE
PART NO. MG620145T-*10