PART NO. MG621469

CUSTOMER DRAWING

GENERAL TOLERANCE (HOUSING)							USED ON
10 MAX	50 MAX	100 MAX	250 MAX	250 VR	ANGLE	ECCENT	
±0.2	±0.3	±0.55	±0.95	±1.4	±30'	0.1	

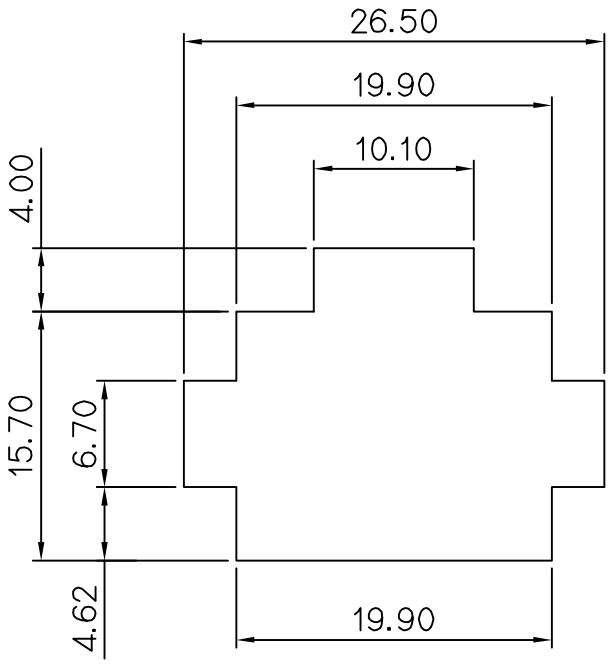

Panel hole dimensions tolerance ±0.1(mm)

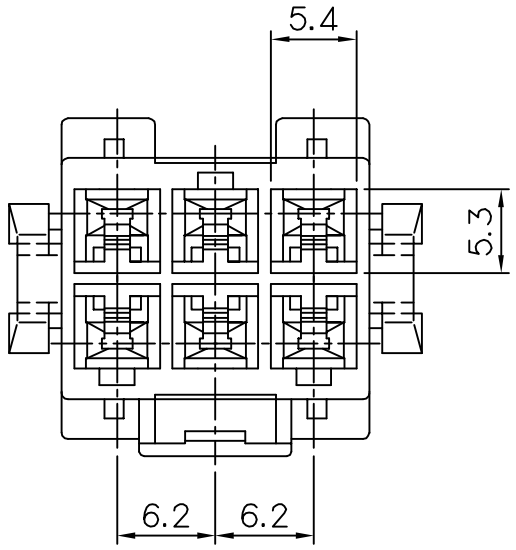

NOTE

1. MUST BE FREE OF FLASH, SINK,WELDLINE AND IMPERFECTION THAT AFFECT FUNCTION.
2. APPLICABLE TERMINAL : ST740690,691,692,693,871-3
3. APPLICABLE HOUSING : MG611468 (1)
4. APPLICABLE R/HOLDER : MG631168-2
5. 6 HAZARDOUS SUBSTANCES IN PARTS (LEAD,MERCURY, CADMIUM,HEXAVALENT CHROMIUM,PBBs,PBDEs) SHALL NOT EXCEED THE MAXIMUM PERMISSIBLE CONCENTRATION PRESCRIBED UNDER EU ELV DIRECTIVE & RoHS REGULATION.

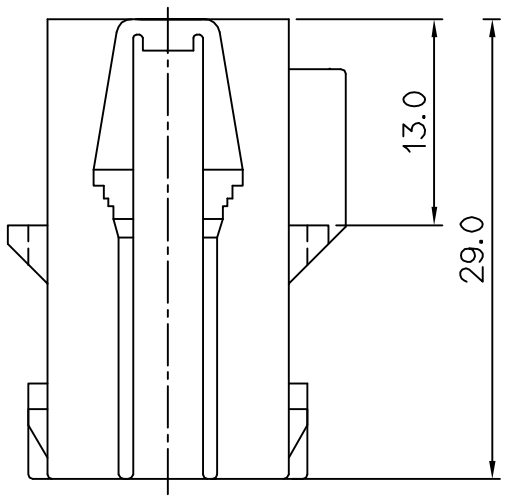

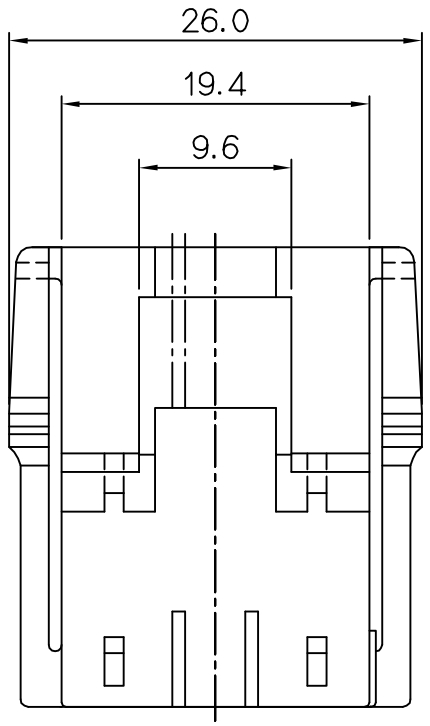

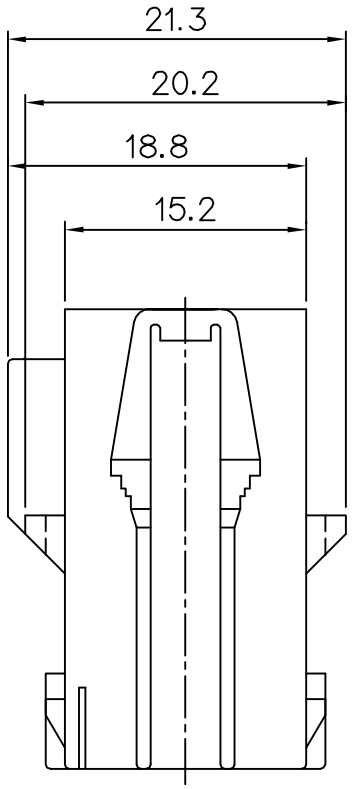

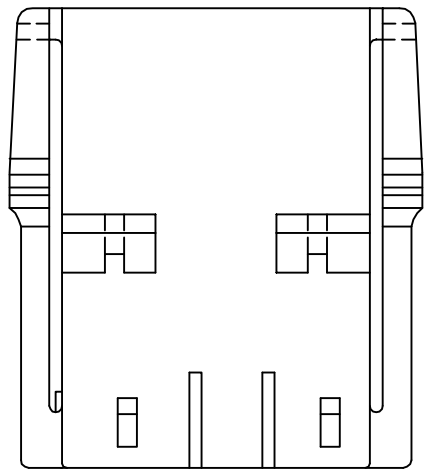

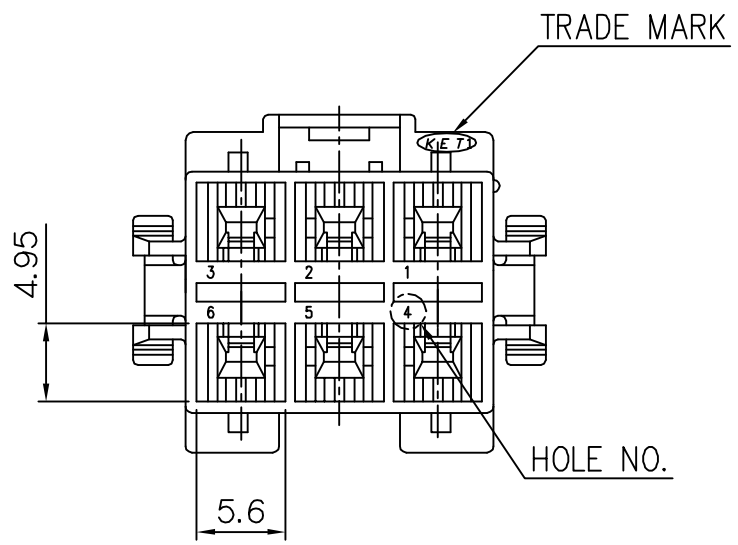

주 기

1.기능상 유해한 FLASH, SINK,WELDLINE 등이 없을것.
2.적용 TERMINAL: ST740690,691,692,693,871-3
3.적용 HOUSING: MG611468 (1)
4.적용 R/HOLDER: MG631168-2
3.제품내 함유된 6대 유해물질 (납,수은,카드뮴,6가크롬, PBBs,PBDEs)은 EU ELV 지침 및 RoHS 법규에서 지정한 최대 허용 농도를 초과해서는 안된다.

ISSUE MARK

LTR	REVISION RECORD	DR.	CHK.	APP.	DATE
2	설계사양변경서'S110128'근거 도면재작성	KSH		—	11.04.29
1	PART NO. 변경	HEE	BOG		98.01.14

DR. KO 97.06.03 — CHK. 6/3 — 6/5 — APP. 6/5

MATERIAL PBT (V0)
FINISH NATURAL
WIRE RANGE
INSULATION
TOLERANCE EXCEPT AS NOTED SEE TABLE
SCALE 2/1

KET ENGINEERED KOREA ELECTRIC TERMINAL CO., LTD.
CLASS
TYPE
PART NO. MG621469
PART NAME 1806 D/L 6P REC HS'G

(DIMENSIONS IN MM)