PART NO. MG625041-2

CUSTOMER DRAWING

GENERAL TOLERANCE (HOUSING)							USED ON
10 MAX	50 MAX	100 MAX	250 MAX	250 VR	ANGLE	ECCENT	
±0.2	±0.3	±0.55	±0.95	±1.4	±30'	0.1	

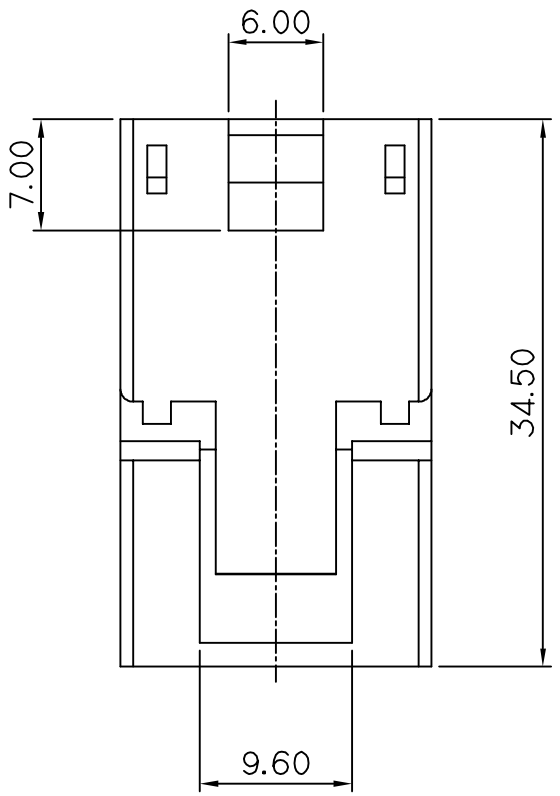

NOTE

1. UNLESS OTHERWISE SPECIFIED ALL RADIUS TO BE 0.3 RADIUS.
2. MUST BE FREE OF FLASH, WELDLINE AND IMPERFECTION THAT AFFECT FUNCTION.
3. APPLICABLE HOUSING : MG615042
   APPLICABLE R/HOLDER : MG635043
   APPLICABLE TERMINAL : ST741248,49,50
4. 6 HAZARDOUS SUBSTANCES IN PARTS (LEAD,MERCURY, CADMIUM,HEXAVALENT CHROMIUM,PBBs,PBDEs) SHALL NOT EXCEED THE MAXIMUM PERMISSIBLE CONCENTRATION PRESCRIBED UNDER EU ELV DIRECTIVE & RoHS REGULATION.

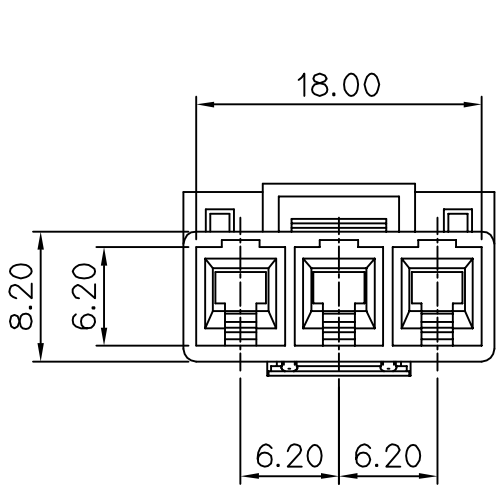

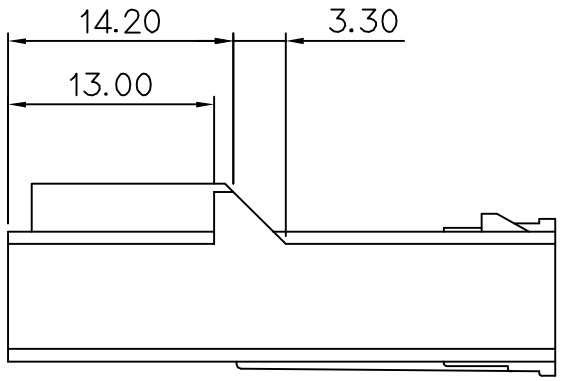

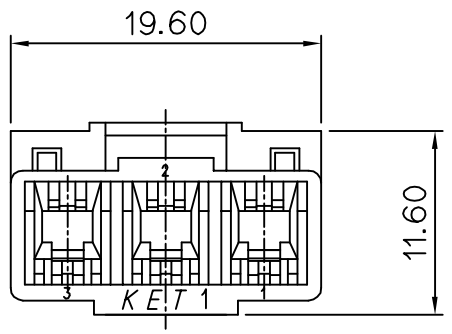

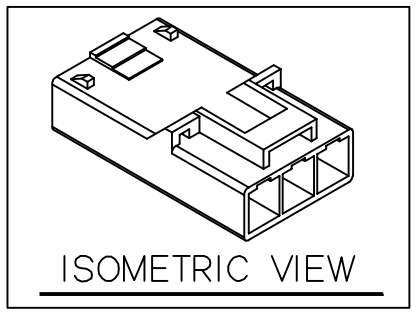

주 기

1.지시하지 않은 반경 R은 0.3로 한다
2.기능상 유해한 BURR 및 WELDLINE등이 없을 것.
3.적용 HOUSING : MG615042
   적용 R/HOLDER : MG635043
   적용 TERMINAL : ST741248,49,50
4.제품내 함유된 6대 유해물질 (납,수은,카드뮴,6가크롬, PBBs,PBDEs)은 EU ELV 지침 및 RoHS 법규에서 지정한 최대 허용 농도를 초과해서는 안된다.

(DIMENSIONS IN MM)

ISSUE MARK

LTR	REVISION RECORD	DR.	CHK.	APP.	DATE
⚠	ECO-1409-113 근거 도면 재작성	LCM	KSH	BUC	'14.09.19

DR. KSH '10.03.25
CHK. '10.03.25
CHK.
APP. '10.03.25

MATERIAL ⚠PET+PC(GWIT)
FINISH BLUE
WIRE RANGE
INSULATION
TOLERANCE EXCEPT AS NOTED SEE TABLE
SCALE 2/1
PART NAME NEW 3220 3P MALE HOUSING

KOREA ELECTRIC TERMINAL CO., LTD.
CLASS NEW 3220
TYPE
PART NO. MG625041-2