PART NO. MG625250

CUSTOMER DRAWING

GENERAL TOLERANCE (HOUSING)							USED ON
10MAX	50MAX	100MAX	250MAX	250VR	ANGLE	ECCENT	
±0.2	±0.3	±0.55	±0.95	±1.4	±30'	0.1	

NOTE

1. MUST BE FREE OF FLASH, SINK AND IMPERFECTION THAT AFFECT FUNCTION.
2. 6 HAZARDOUS SUBSTANCES IN PARTS (LEAD,MERCURY, CADMIUM,HEXAVALENT CHROMIUM,PBBs,PBDEs) SHALL NOT EXCEED THE MAXIMUM PERMISSIBLE CONCENTRATION PRESCRIBED UNDER EU ELV DIRECTIVE & RoHS REGULATION.
3. APPLICABLE R/HOLDER : MG635252
4. APPLICABLE TERMINAL : ST741175,1176

주 기

1.기능상 유해한 FLASH, SINK, 미성형 등이 없을 것.
2.제품내 함유된 6대 유해물질 (납,수은,카드뮴,6가크롬, PBBs,PBDEs)은 EU ELV 지침 및 RoHS 법규에서 지정한 최대 허용 농도를 초과해서는 안된다.
3.적용 R/HOLDER : MG635252
4.적용 TERMINAL: ST741175,1176

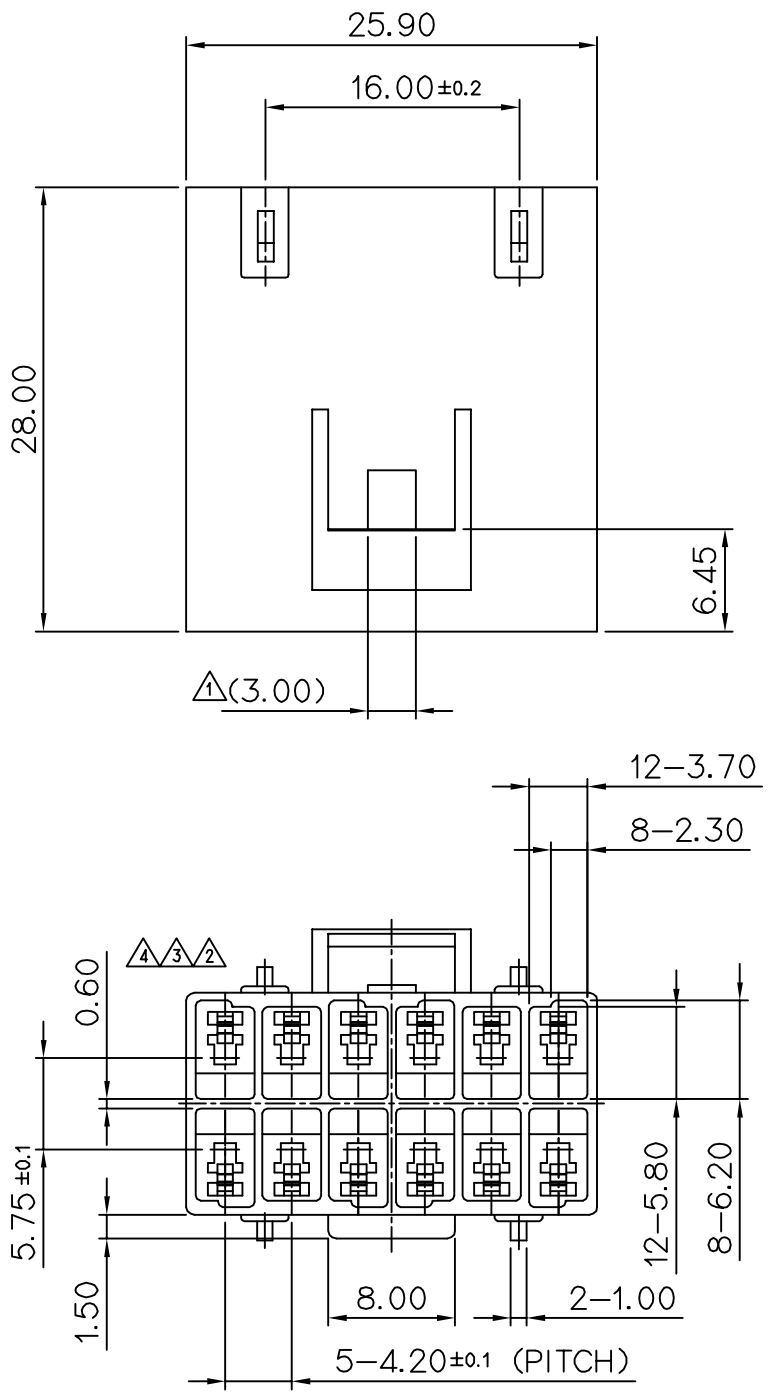

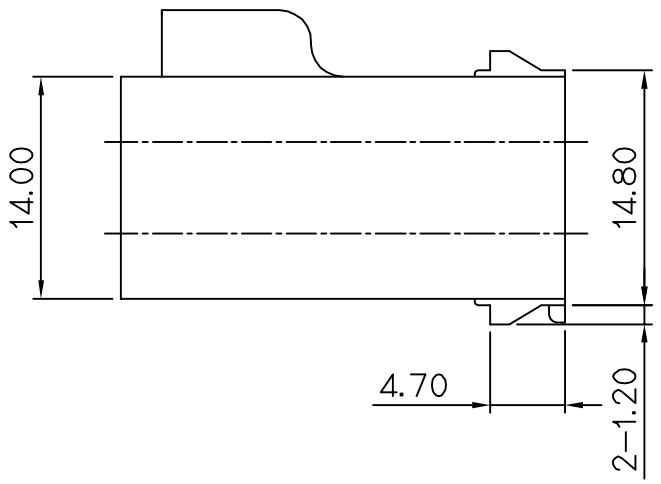

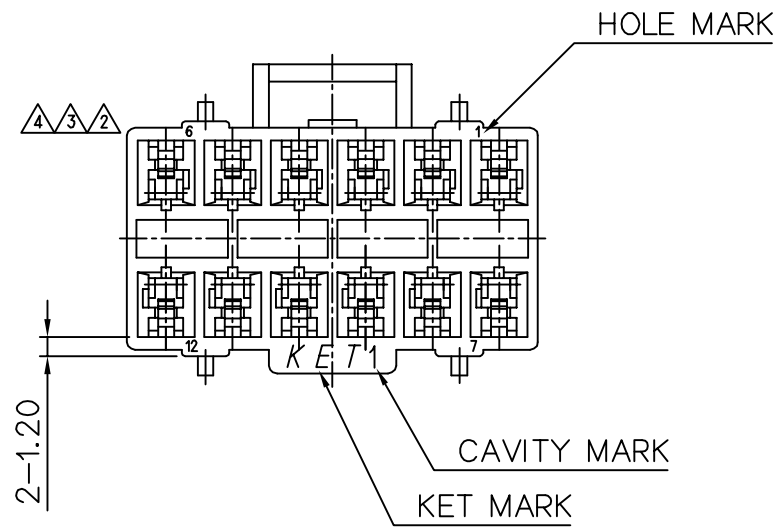

ISSUE MARK

LTR	REVISION RECORD	DR.	CHK.	APP.	DATE
△4	ECO-1405-029 근거 수정	PSH	KSH	BUC	'14.05.09
△3	ECO-1301-187 근거 수정	PSH	KSH	BUC	'13.01.25
△2	ECO-1209-155 근거 수정	PSH	KSH	BUC	'12.09.27
△1	설계사양변경(S110043)근거 수정	PSH	KSH	BUC	'11.02.08

DR.	PSH. 10.10.12	CHK.	
CHK.	KSH. 10.10.12	APP.	BUC. 10.10.12

MATERIAL	PA66(V0)	KOREA ELECTRIC TERMINAL CO., LTD.	
FINISH	NATURAL		
WIRE RANGE		CLASS	NEW 050
INSULATION		TYPE	
TOLERANCE EXCEPT AS NOTED	SEE TABLE	SCALE 2/1	PART NO. MG625250
PART NAME	NEW 050 12M HOUSING		

(DIMENSIONS IN MM)