PART NO. MG633408

CUSTOMER DRAWING

GENERAL TOLERANCE (HOUSING)							USED ON
10 MAX	50 MAX	100 MAX	250 MAX	250 VR	ANGLE	ECCENT	
±0.2	±0.3	±0.55	±0.95	±1.4	±30'	0.1	

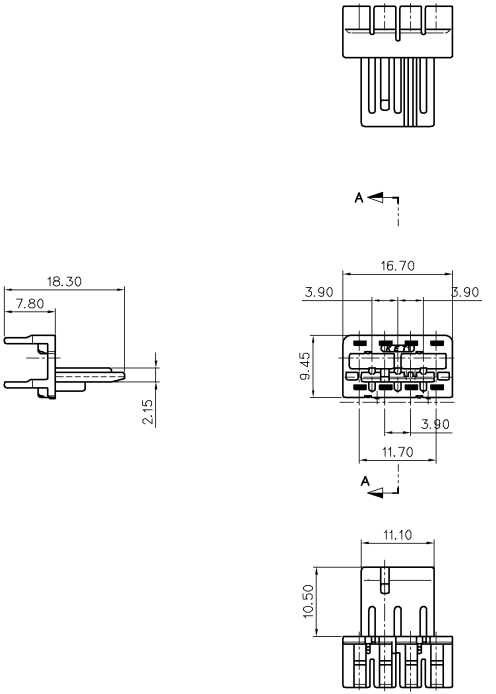

주 기

1. 지시하지 않은 R은 0.3로 한다
2. 기능에 유해한 BURR, FLASH, SINK 가 없을 것
3. 적용 HOUSING : MG613406, MG613407

NOTES

1. UNLESS OTHERWISE SPECIFIED ALL RADIUS TO BE 0.3 RADIUS.
2. MUST BE FREE OF FLASH,SINK AND IMPERFECTION THAT AFFECT FUNCTION.
3. APPLICABLE HOUSING : MG613406, MG613407

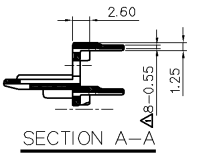

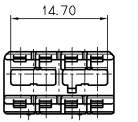

한국단자공업주식회사
출
2007. 06. 05
도
제품개발1팀

ISSUE MARK

LTR	REVISION RECORD	DR.	CHK.	APP.	DATE
△	설계사양변경(S070133)근거 도면 제작함 (HSG 재질을 개선 유동 발생변경)	KBS			'07.06.05

DR. KYM 2005.03.14 CHK. APP.

CHK.

MATERIAL	PBT	KET ENGINEERED	KOREA ELECTRIC TERMINAL CO., LTD.
FINISH	NATURAL		
WIRE RANGE		CLASS	040 WP
INSULATION		TYPE	
TOLERANCE EXCEPT AS NOTED	SEE TABLE	SCALE 2/1	PART NO. MG633408
PART NAME	RK 8M FRONT HOLDER		

(DIMENSIONS IN MM)