PART NO. MG634531

CUSTOMER DRAWING

GENERAL TOLERANCE (HOUSING)							USED ON
10MAX	50MAX	100MAX	250MAX	250VR	ANGLE	ECCENT	
±0.2	±0.3	±0.55	±0.95	±1.4	±30'	0.1	

주기

1. 기능상 유해한 BURR, WELDLINE 없을 것.
2. 지시하지 않은 모든 R은 0.3R
3. 적용 TERMINAL :ST730567, 568, 569
4. 제품내 함유된 6대 유해물질 (납,수은,카드뮴,6가크롬, PBBs,PBDEs)은 EU ELV 지침 및 RoHS 법규에서 지정한 최대 허용 농도를 초과해서는 안된다.

NOTE

1. MUST BE FREE OF BURR, WELDLINE AND IMPERFECTION THAT AFFECT FUNCTION.
2. UNLESS OTHERWISE SPECIFIED ALL RADIUS TO BE 0.3 RADIUS.
3. APPLICABLE TERMINAL :ST730567, 568, 569
4. 6 HAZARDOUS SUBSTANCES IN PARTS (LEAD, MERCURY,CADMIUM,HEXAVALENT CHROMIUM,PBBs, PBDEs) SHALL NOT EXCEED THE MAXIMUM PERMISSIBLE CONCENTRATION PRESCRIBED UNDER EU ELV DIRECTIVE & RoHS REGULATION.

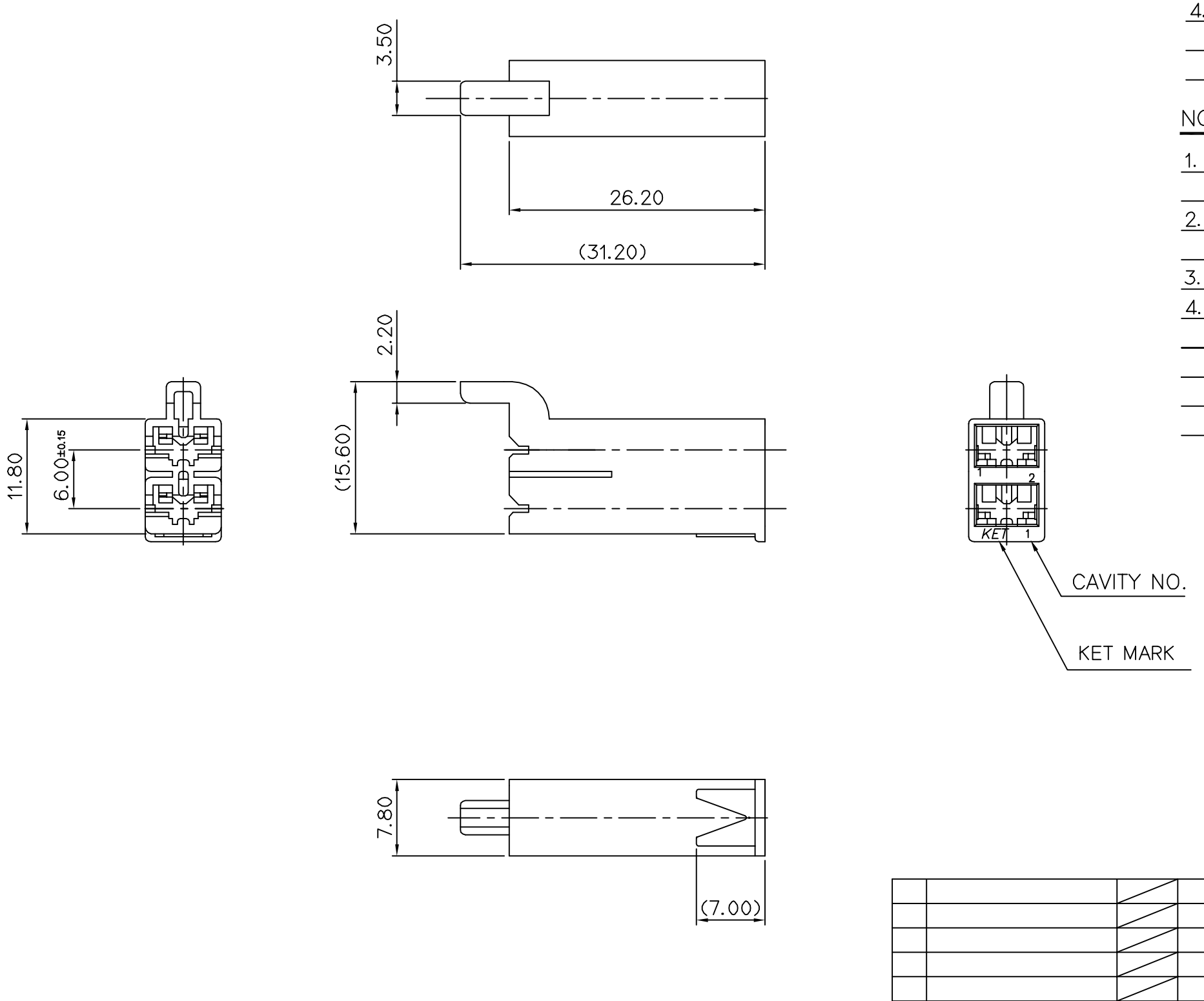

(DIMENSIONS IN MM)

ISSUE MARK

LTR	REVISION RECORD	DR. / CHK.	APP.	DATE

DR. PSH	09.02.25	CHK. CJH	09.02.25
CHK. CSH	09.02.25	APP. BUC	09.02.25

MATERIAL	PA66(V0)	KET ENGINEERED	KOREA ELECTRIC TERMINAL CO., LTD.
FINISH	NATURAL		
WIRE RANGE		CLASS	
INSULATION		TYPE	
TOLERANCE EXCEPT AS NOTED SEE TABLE	SCALE 2/1	PART NO. MG634531	
PART NAME 187 P-LOCK HOUSING 2P (P=6mm V0급)			