CUSTOMER DRAWING

PART NO. MG635810-41

GENERAL TOLERANCE (HOUSING)										USED ON
10 MAX	30 MAX	50 MAX	70 MAX	100 MAX	120 MAX	250 MAX	250 VR	ANGLE	ECCENT	
±0.15	±0.2	±0.3	±0.4	±0.5	±0.75	±0.9	±1.4	±30′	0.1	

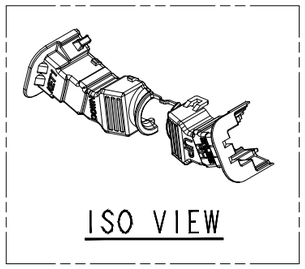

ISO VIEW

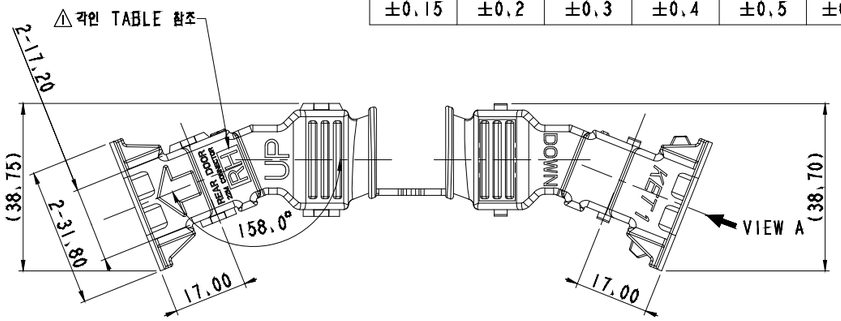

주기
1. 지시하지 않은 반경 R은 0.5로 한다.
2. 지시하지 않은 모따기 C는 0.5으로 한다.
3. 기능상 유해한 BURR 및 WELDLINE 등이 없을 것.
4. 적용 MALE ASSY: MG646002
5. KET 문자 : 기울기 15°(H; 0.1~0.2, SIZE; 1.5)
   CAVITY NO. : 기울기 0°(H; 0.1~0.2, SIZE; 1.5)
6. HOUSING 표면 부식 사양: KDP-6A
7. 제품내 함유된 6대 유해물질 (납,수은,카드뮴,6가크롬, PBBs,PBDEs)은 EU ELV 지침 및 RoHS 법규에서 지정한 최대 허용 농도를 초과해서는 안된다.

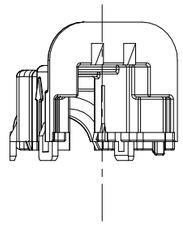

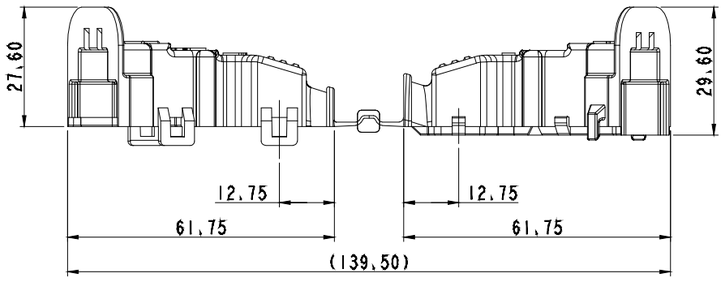

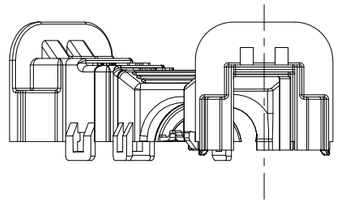

VIEW A

NO.	MATERIAL	COLOR
0	PP	NATURAL
1		RED
2		BLUE
20		JADE
3		YELLOW
4		GRAY
40		DARK GRAY
* 41		LIGHT GRAY
⚠ * 5		BLACK
6		DARK GREEN
7		BROWN
8		LIGHT GREEN
9		MAGENTA
11		ORANGE

NOTE
1. UNLESS OTHERWISE SPECIFIED ALL RADIUS TO BE 0.5 RADIUS.
2. UNLESS OTHERWISE SPECIFIED ALL CHAMFERS TO BE 0.5 CHAMFER.
3. MUST BE FREE OF FLASH, WELDLINE AND IMPERFECTION THAT AFFECT FUNCTION.
4. APPLICABLE MALE ASSY: MG646002
5. KET MARK : TAPER 15° (H; 0.1~0.2, SIZE; 1.5)
   CAVITY NO. : TAPER 0° (H; 0.1~0.2, SIZE; 1.5)
6. HOUSING ETCHING SPEC : KDP-6A
7. 6 HAZARDOUS SUBSTANCES IN PARTS (LEAD,MERCURY, CADMIUM,HEXAVALENT CHROMIUM,PBBs,PBDEs) SHALL NOT EXCEED THE MAXIMUM PERMISSIBLE CONCENTRATION PRESCRIBED UNDER EU ELV DIRECTIVE & RoHS REGULATION.

PART NO.	PART NAME	FINISH	각인사양
MG635810-41	REAR DOOR 22M WIRE COVER RH	LIGHT GRAY	RH
⚠ MG635846-5	REAR DOOR 22M WIRE COVER LH	BLACK	LH

APPROVED
2019-11-06
KOREA ELECTRIC TERMINAL CO., LTD.
Korea Electric Terminal Co., LTD.

ISSUE MARK

LTR	REVISION RECORD	DR.	CHK.	APP.	DATE
⚠	각인사양추가 ECO-1707-436 근거 도면 제작실	LCK	WON	CNS	17.09.26
⚠	도면 비율(개별->병합) ECO-1703-3122근거 도면 제작실	CHM	LIM	SUK	17.03.24

DR. LCK '16.10.25 CHK. LJE '16.10.25
CHK. APP. BIN '16.10.25

MATERIAL
FINISH
WIRE RANGE
INSULATION
CLASS
TYPE
SEE TABLE
SCALE 1/1
PART NO. MG635810-41
PART NAME REAR DOOR 22M WIRE COVER RH

KET ENGINEERED KOREA ELECTRIC TERMINAL CO., LTD.

(DIMENSIONS IN MM)