PART NO. MG644837

CUSTOMER DRAWING

GENERAL TOLERANCE (TERMINAL)					GENERAL TOLERANCE (HOUSING)							USED ON
10 MAX	20 MAX	45 MAX	ANGLE	ECCENT	10 MAX	50 MAX	100 MAX	250 MAX	250 VR	ANGLE	ECCENT	
±0.2	±0.25	±0.3	±30'	0.1	±0.2	±0.3	±0.55	±0.95	±1.4	±30'	0.1	

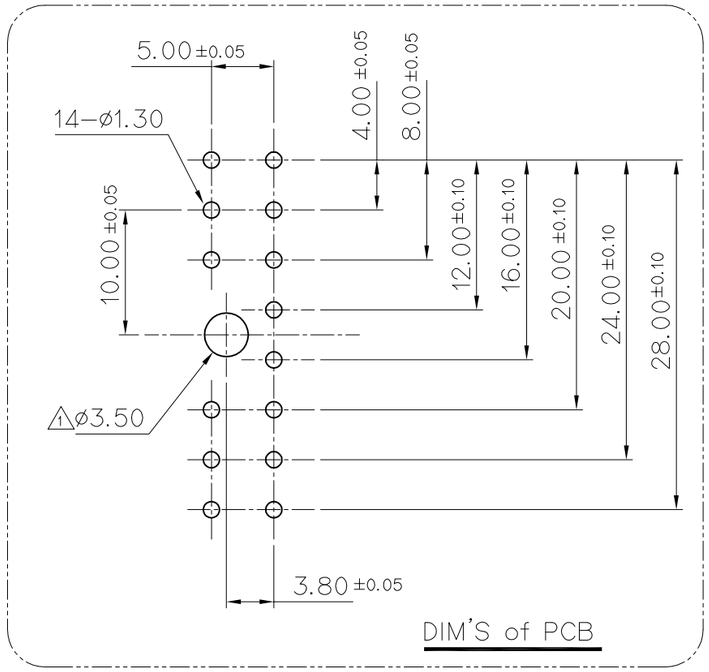

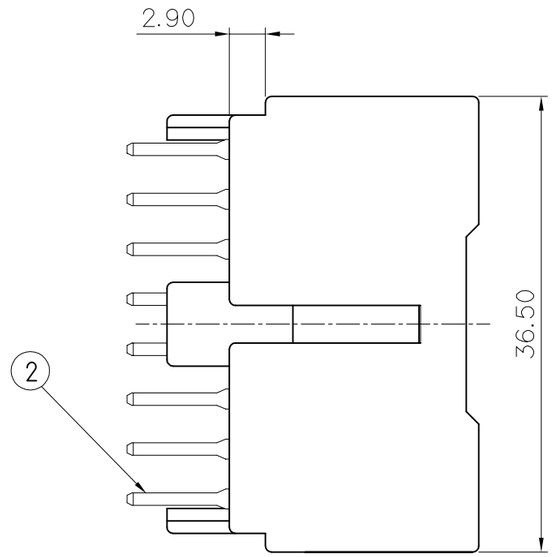

NOTE

1.지시하지 않은 반경 R은 0.5로 한다

2.지시하지 않은 모따기 C는 0.5로 한다.

3. 적용 HOUSING: MG651210

4.제품내 함유된 6대 유해물질 (납,수은,카드뮴,6가크롬, PBBs,PBDEs)은 EU ELV 지침 및 RoHS 법규에서 지정한 최대 허용 농도를 초과해서는 안된다.

NOTE

1.UNLESS OTHERWISE SPECIFIED ALL RADIUS ARE TO BE 0.5 RADIUS.

2.UNLESS OTHERWISE SPECIFIED ALL CHAMFER ARE TO BE 0.5 CHAMFER.

3.USED HOUSING: MG651210

4. 6 HAZARDOUS SUBSTANCES IN PARTS (LEAD MERCURY,CADMIUM, HEXAVALENT CHROMIUM, PPBs,PPDEs) SHALL NOT EXCEED THE MAXIMUM PERMISSIBLE CONCENTRATION PRESCRIBED UNDER EU ELV DIRECTIVE & RoHS REGULATION.

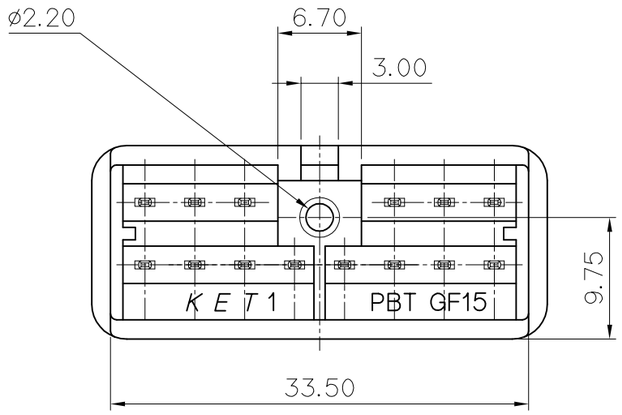

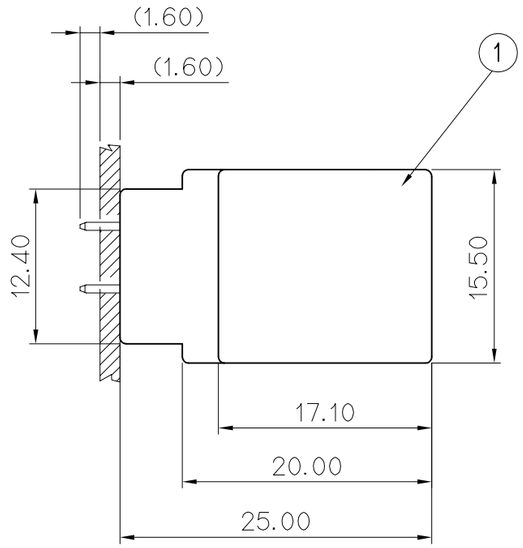

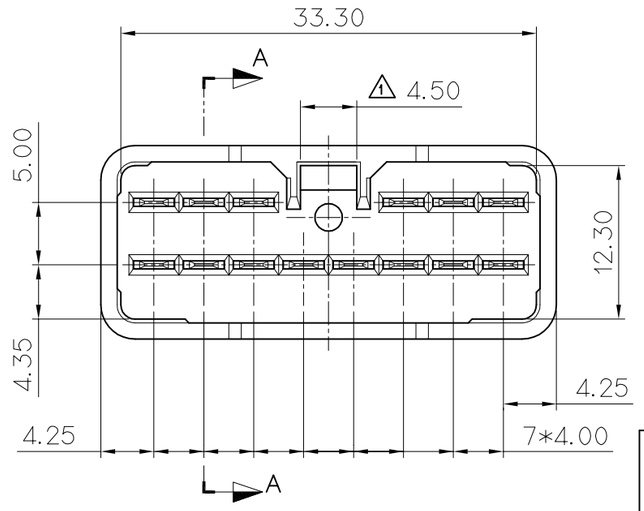

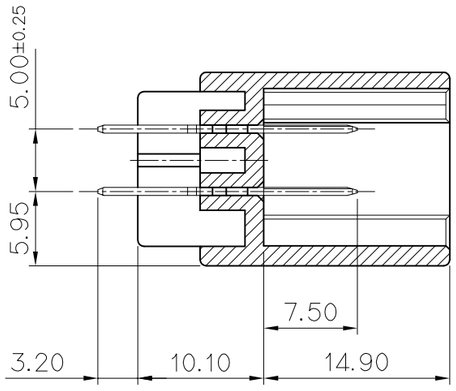

SECTION A-A

NO.	PART NAME	PART NO.	MATERIAL	Q'TY	FINISH
1	090Ⅱ 14M PCB HOUSING (VRT)	MG674838	PBT GF15	1	NATURAL / BLACK
2	PCB MALE TERMINAL(VRT)	ST790215	BRASS	14	PRE-TIN

ISSUE MARK

LTR	REVISION RECORD	DR.	CHK.	DATE
1	설/변(ECO-1105-313) 도면 오기 수정	LSY		'11.05.17

DR. CYJ 10.04.09 CHK. 10.04.09

CHK. APP. 10.04.09

MATERIAL SEE TABLE

FINISH SEE TABLE

WIRE RANGE

INSULATION

TOLERANCE EXCEPT AS NOTED SEE TABLE

SCALE 2/1

KET ENGINEERED KOREA ELECTRIC TERMINAL CO., LTD.

CLASS 090Ⅱ

TYPE

PART NO. MG644837

PART NAME 090Ⅱ 14M PCB ASSY (VRT)

(DIMENSIONS IN MM)