PART NO. MG645771

CUSTOMER DRAWING

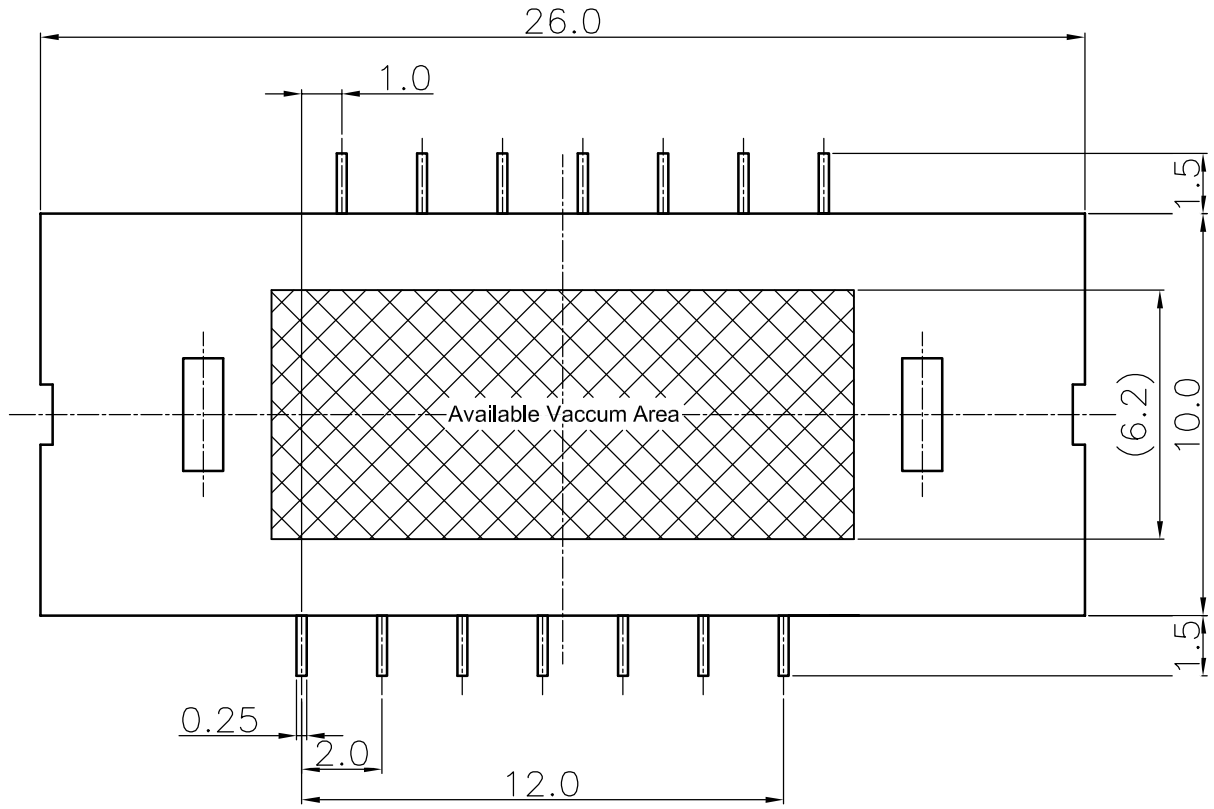

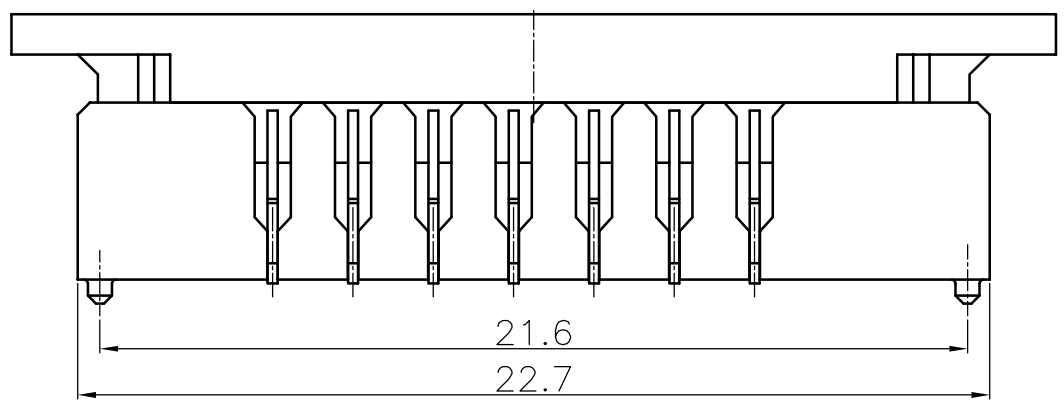

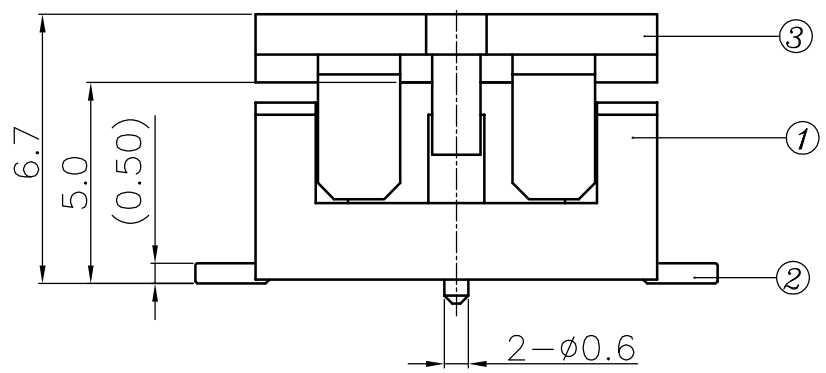

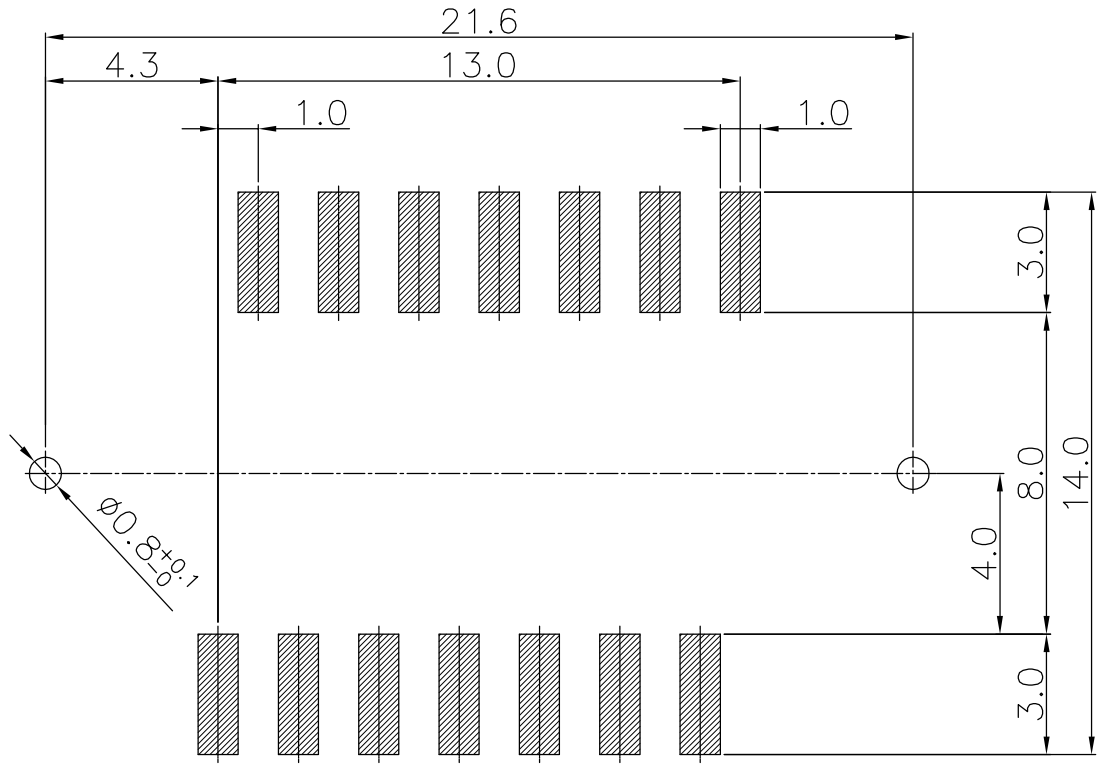

REFERENCE PCB LAYOUT(Tolerance:±0.05)

* NOTE *

1.TOLERANCE : ±0.2 , ANGLE ±3°

2.CONPLANARITY : 0.15 MAX

3."6 Hazardous substance in parts(Lead,Mercury,Cadmium Hexavalent Chromium,PBBs,PBDEs)shall not exceed the maximum permissible concentration prescribed under EU ELV Directive & RoHS Regulation."

4.Floating range toward

X Direction : ±0.4

Y Direction : ±0.4

Z Direction : ±0.5

5.No Twist

6.SPEC: ES91500-03, ES91500-02, MS201-02

7.Solder : Reflow Solder Only(Suface mount)

–	
DIE NO	ISSUE MARK

한국단자공업주식회사 출 2013.12.09 도 전산 IT개발팀

NO.	PART NAME	MATERIAL	FINISH	Q'TC
4	–			
3	PLUG TERMINAL	Copper Alloy	Ni + Contact & Lead Au(0.03㎛MIN)	14
2	PLUG COVER 14P	Polyamide	BLACK	1
1	PLUG HOUSING 14P	Polyamide	UL94-V0, BLACK	1

LTR	REVISION RECORD	DR./CHK.	APP.	DATE

DR.	Kim.J.M 13'03.19
CHK.	Um.Y.H 13'03.19
CHK.	
APP.	Song.M.K 13'03.19

MATERIAL	–
FINISH	–
WIRE RANGE	–
INSULATION	–
TOLERANCE EXCEPT AS NOTED	–
SCALE	1/1

KIET ENGINEERED KOREA ELECTRIC TERMINAL CO., LTD.

CLASS BOARD TO BOARD

TYPE FLOATING P=1.0mm

PART NO. MG645771

PART NAME 1.0mm FLOATING B to B PLUG 14P ASSY H5.0

1/1

DESIGN REVISION NO. 1