CUSTOMER DRAWING

PART NO. MG646045-5

GENERAL TOLERANCE (HOUSING)										USED ON
10 MAX	30 MAX	50 MAX	70 MAX	100 MAX	120 MAX	250 MAX	250 VR	ANGLE	ECCENT	
±0.15	±0.2	±0.3	±0.4	±0.5	±0.75	±0.9	±1.4	±30′	0.1	

NO.	PART NAME	PART NO.	MATERIAL	COLOR	QTY.
1	3118 WP 3M HOUSING	MG676713-5	PBT	BLACK	1
2	3118 WP 3M FRONT HOLDER	MG676714	PBT	NATURAL	1

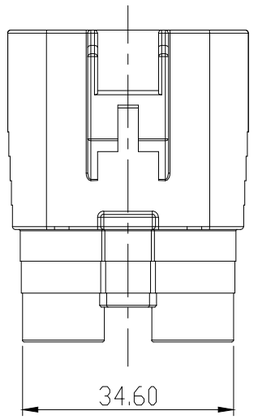

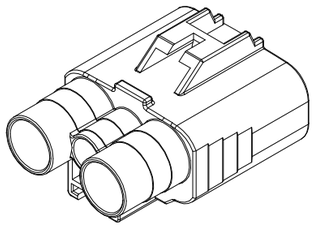

주기
1. 기능상 유해한 BURR 및 WELDLINE 등이 없을 것.
2. 적용 TERMINAL :
   312 II : ST740939, 940, 941
   187 II : ST740734, 735, 736
   적용 CONNECTOR : MG642925-5
   적용 CLIP : MG631929
3. 제품내 함유된 6대 유해물질 (납,수은,카드뮴,6가크롬, PBBs,PBDEs)은 EU ELV 지침 및 RoHS 법규에서 지정한 최대 허용 농도를 초과해서는 안된다.

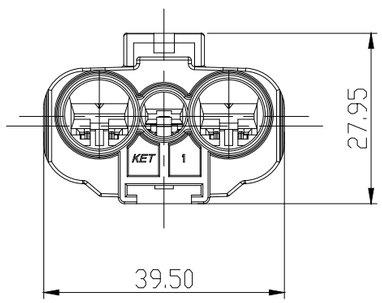

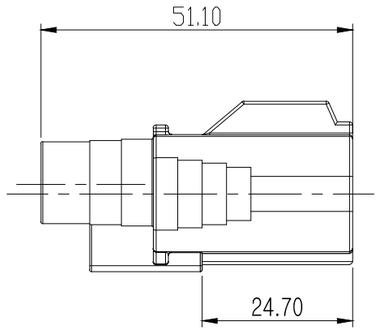

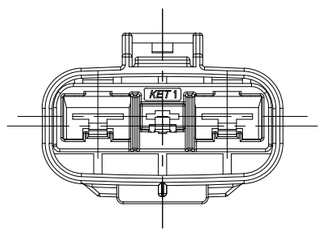

NOTE
1. MUST BE FREE OF BURR, WELDLINE AND IMPERFECTION THAT AFFECT FUNCTION.
2. APPLICABLE TERMINAL :
   312 II : ST740939, 940, 941
   187 II : ST740734, 735, 736
   APPLICABLE CONNECTOR : MG642925-5
   APPLICABLE CLIP : MG631929
3. 6 HAZARDOUS SUBSTANCES IN PARTS (LEAD,MERCURY, CADMIUM,HEXAVALENT CHROMIUM,PBBs,PBDEs) SHALL NOT EXCEED THE MAXIMUM PERMISSIBLE CONCENTRATION PRESCRIBED UNDER EU ELV DIRECTIVE & RoHS REGULATION.

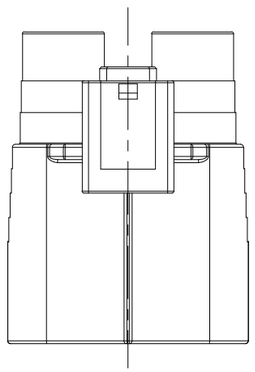

NO.	MATERIAL	COLOR
0	P B T	NATURAL
1		RED
2		BLUE
20		JADE
3		YELLOW
4		GRAY
40		DARK GRAY
41		LIGHT GRAY
✳ 5		BLACK
6		DARK GREEN
7		BROWN
8		LIGHT GREEN
9		MAGENTA
11		ORANGE

APPROVED
2019-11-05
KOREA ELECTRIC TERMINAL CO., LTD.
Korea Electric Terminal Co., LTD.

ISSUE MARK

LTR	REVISION RECORD	DR. / CHK.	APP.	DATE

DR. YIK. 2016.7.8 | CHK.
CHK. JKL 2016.7.8 | APP. BIN 2016.7.8

MATERIAL	SEE TABLE	KET ENGINEERED	KOREA ELECTRIC TERMINAL CO., LTD.
FINISH	SEE TABLE		
WIRE RANGE		CLASS	3118
INSULATION		TYPE	WP
TOLERANCE EXCEPT AS NOTED	SEE TABLE	SCALE 1/1	PART NO. MG646045-5
PART_NAME	3118 WP 3M ASSY		

CDIMENSIONS IN MM)