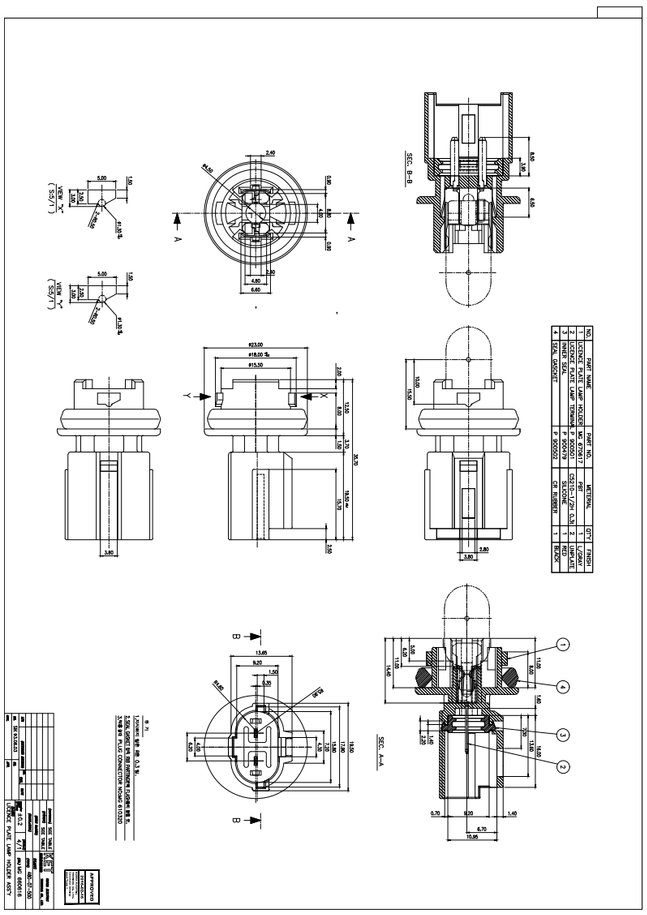
SEC. B-B
SEC. A-A
VIEW "X" (SCALE 1/1)
VIEW "Y" (SCALE 1/1)
A
B
X
Y
1
2
3
4
5
6
7
8
9
10
11
12
13
14
15
16
17
18
19
20
21
22
23
24
25
26
27
28
29
30
31
32
33
34
35
36
37
38
39
40