CUSTOMER DRAWING

PART NO. MG662305

NO.	PART NAME	PART NO.	MATERIAL	QT'Y	FINISH
1	POSITION B/H WP 2P HS'G(L)	MG672304	⚠PA66+GF13%	1	BLACK
2	POSITION B/H WP POSITIVE TERMINAL	P901127	COPPER ALLOY	2	UNPLATE
3	POSITION B/H SEAL GASKET	P901128	SILICONE	1	RED

GENERAL TOLERANCE (SILICONE RUBBER)						GENERAL TOLERANCE (TERMINAL)					GENERAL TOLERANCE (HOUSING)					USED ON
50MAX	100MAX	250MAX	2500VR	ANGLE	ECCENT	50MAX	100MAX	250MAX	ANGLE	ECCENT	10MAX	20MAX	45MAX	ANGLE	ECCENT	
±0.2	±0.3	±0.5	±0.75	±30'	0.1	±0.2	±0.3	±0.5	±30'	0.1	±0.2	±0.25	±0.3	±30'	0.1	

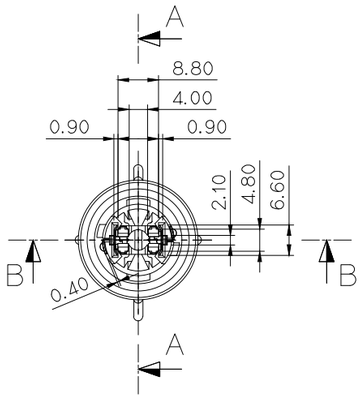

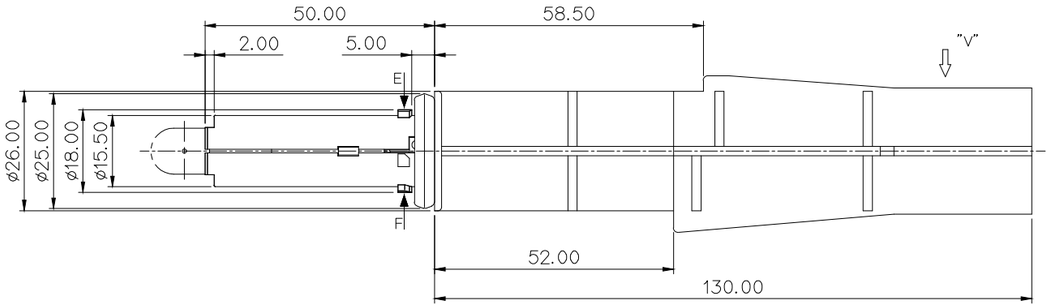

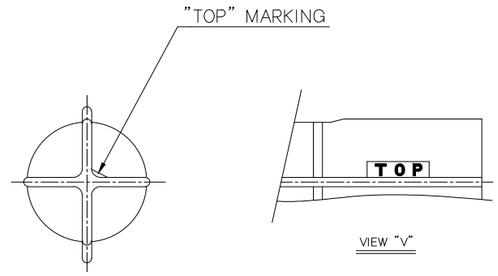

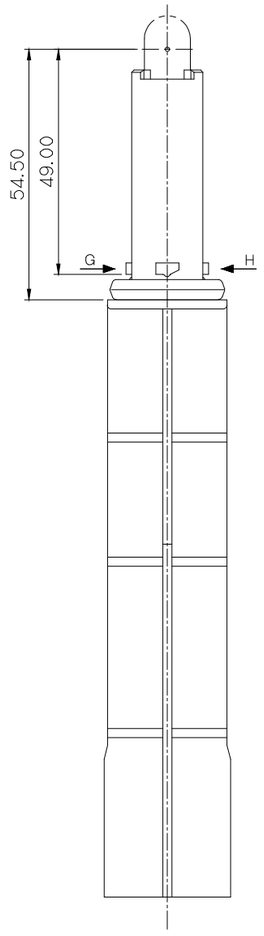

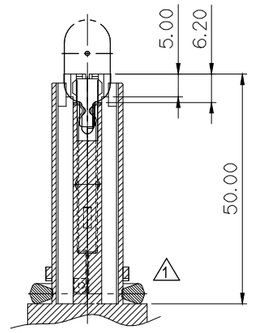

SECTION A–A

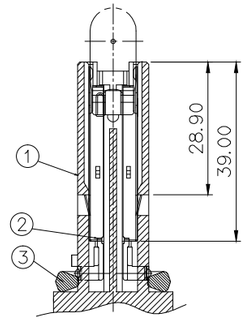

SECTION B–B

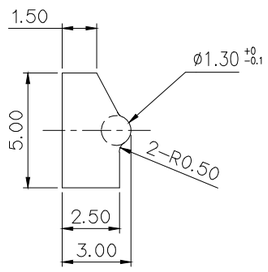

VIEW "E"
(S:5/1)

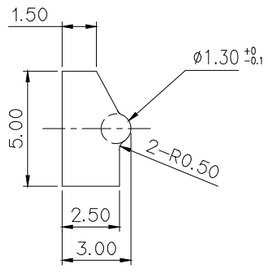

VIEW "F"
(S:5/1)

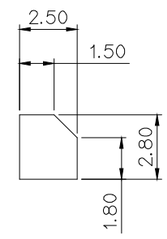

VIEW "G,H"
(S:5/1)

주 기

1. 지시하지 않은 R은 0.3 임
2. SEAL GASKET 접촉 RIB PARTING면에 FLASH등이 없을 것.
3. 방수 기능은 ES 91500에 만족 할 것.
4. CUSTOMER MARK : 기울기 15°(H; 0.1~0.2, SIZE; 1.5)
   CAVITY NO.: 기울기 0°(H; 0.1~0.2, SIZE; 1.5)
5. 적용 TERMINAL : ST760877

NOTE

1. UNLESS OTHERWISE SPECIFIED ALL RADII TO BE 0.3 RADIUS.
2. MUST BE FREE OF FLASH THAT PART LINE TO CONTACT RIB SEAL GASKET
3. WATER PROOP KEEP OF ES91500 SEAL GASKET
4. CUSTOMER MARK : TAPER 15° (H; 0.1~0.2, SIZE; 1.5)
   CAVITY NO. : TAPER 0°(H; 0.1~0.2, SIZE; 1.5)
5. APLLICABLE OF TERMINAL : ST760877

APPROVED
2018-12-11
KOREA ELECTRIC TERMINAL CO., LTD. Connector Development Team 1

ISSUE MARK

LTR	REVISION RECORD	DR.	CHK.	APP.	DATE
2	설계사양 변경(S070132) 근거	HEM			07.06.04
1	고객요구에 의한 형상변경	BIN	—	—	02.08.08

DR. BIN '02.04.27 CHK. KO '02.04.29
CHK. APP.

MATERIAL SEE TABLE
FINISH SEE TABLE
WIRE RANGE
INSULATION
TOLERANCE EXCEPT AS NOTED SEE TABLE
SCALE 1/1
PART NAME POSITION BULB HOLDER WP 2P ASS'Y(L)

KIET ENGINEERED KOREA ELECTRIC TERMINAL CO., LTD.
CLASS
TYPE
PART NO. MG662305

(DIMENSIONS IN MM)