CUSTOMER DRAWING

PART NO. MG665014

GENERAL TOLERANCE (HOUSING)							USED ON
10 MAX	50 MAX	100 MAX	250 MAX	250 VR	ANGLE	ECCENT	
±0.2	±0.3	±0.55	±0.95	±1.4	±30'	0.1	

NO	PART NO.	PART NAME	MATERIAL	FINISH	비고
1	MG675026	RCL B/H HSG	NYLON66+MR30% ⚠1	SEE TABLE	–
2	R602274	RCL B/H SEAL GASKET	SILICONE	BLACK	SILICONE (함유 7%, HARDNESS 40°)

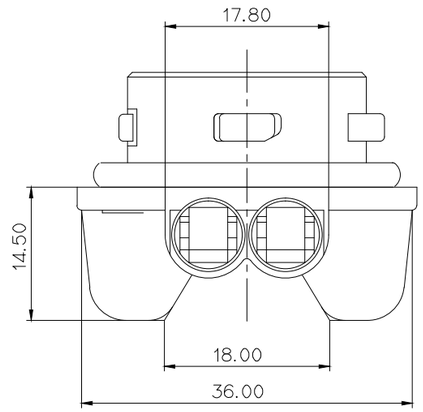

주 기

1. 적용 TERMINAL : ST760794-1(POSITIVE)
   ST760795-1(EARTH)
2. 적용 WIRE SEAL : MG681786(POSITIVE)
   MG681787(EARTH)
3. 제품내 함유된 6대 유해물질 (납, 수은, 카드뮴, 6가크롬, PBBs, PBDEs)은 EU ELV 지침 및 RoHS 법규에서 지정한 최대 허용 농도를 초과해서는 안된다.

NOTE

1. APPLICABLE TERMINAL:ST760794-1(POSITIVE)
   ST760795-1(EARTH)
2. APPLICABLE WIRE SEAL:MG681786(POSITIVE)
   MG681787(EARTH)
3. 6 HAZARDOUS SUBSTANCES IN PARTS (LEAD, MERCURY, CADMIUM, HEXAVALENT CHROMIUM, PBBs, PBDEs) SHALL NOT EXCEED THE MAXIMUM PERMISSIBLE CONCENTRATION PRESCRIBED UNDER EU ELV DIRECTIVE & RoHS REGULATION.

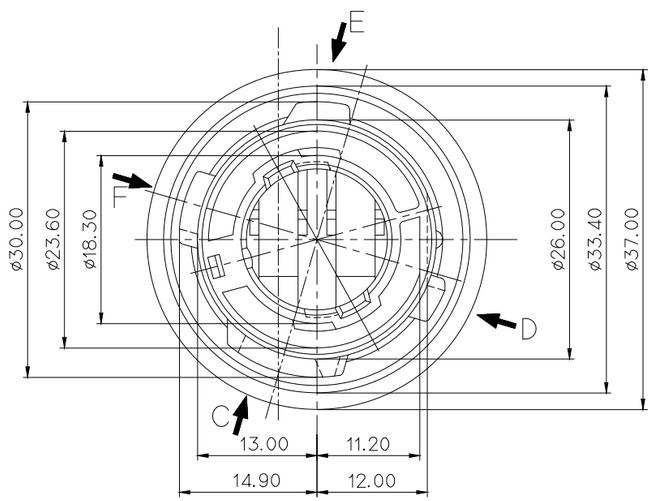

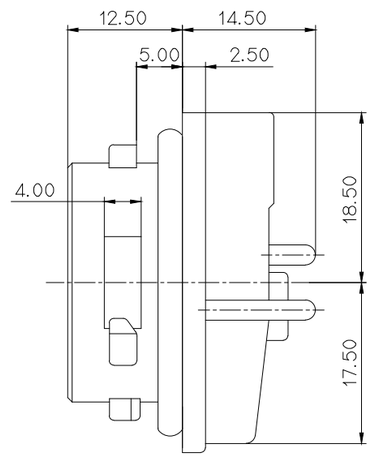

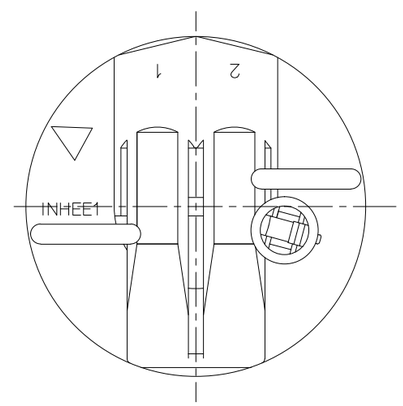

NO.	MATERIAL	COLOR
0	PA66+MR30%	NATURAL
1		RED
2		BLUE
20		JADE
3		YELLOW
* 4		GRAY
40		DARK GRAY
41		LIGHT GRAY
⚠2* 5		BLACK
6		DARK GREEN
⚠2* 7		BROWN
8		LIGHT GREEN
9		MAGENTA
11		ORANGE

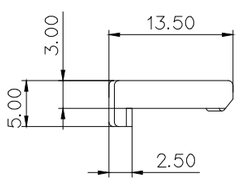

VIEW C

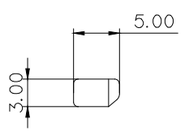

VIEW D

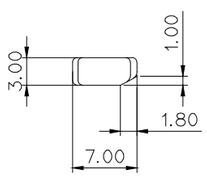

VIEW E

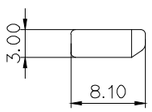

VIEW F

APPROVED
2021-01-07
KOREA ELECTRIC TERMINAL CO., LTD.
Korea Electric Terminal Co., LTD.

ISSUE MARK

LTR	REVISION RECORD	DR.	CHK.	APP.	DATE
⚠2	ECO-2008-351 근거 도면 재작성	LND	KSC	CJH	20.09.01
⚠1	ECO-1510-356 근거 도면 재작성 (원재료 상세 그레이드명 삭제)	LJJ	CKY	LSY	15.10.21

DR. YJH 09.09.22	CHK.		
CHK. HSH 09.09.22	APP. KKJ 09.09.22		

MATERIAL	SEE TABLE	KIET ENGINEERED	KOREA ELECTRIC TERMINAL CO., LTD.
FINISH	SEE TABLE		
WIRE RANGE		CLASS	REAR COMBI LAMP
INSULATION		TYPE	
TOLERANCE EXCEPT AS NOTED	SEE TABLE	SCALE 2/1	PART NO. MG665014
PART NAME	RCL BULB HOLDER ASSY		

(DIMENSIONS IN MM)