CUSTOMER DRAWING

PART NO. MG665803-5

GENERAL TOLERANCE (SILICONE RUBBER)						GENERAL TOLERANCE (TERMINAL)					GENERAL TOLERANCE (HOUSING)							USED ON
0 TO 6	6 TO 10	10 TO 18	18 TO 30	30 TO 50	50 TO 80	10MAX	20MAX	45MAX	ANGLE	ECCENT	10MAX	50MAX	100MAX	250MAX	250VR	ANGLE	ECCENT	
±0.4	±0.5	±0.6	±0.8	±1.0	±1.2	±0.2	±0.25	±0.3	±30'	0.1	±0.2	±0.3	±0.55	±0.95	±1.4	±30'	0.1	

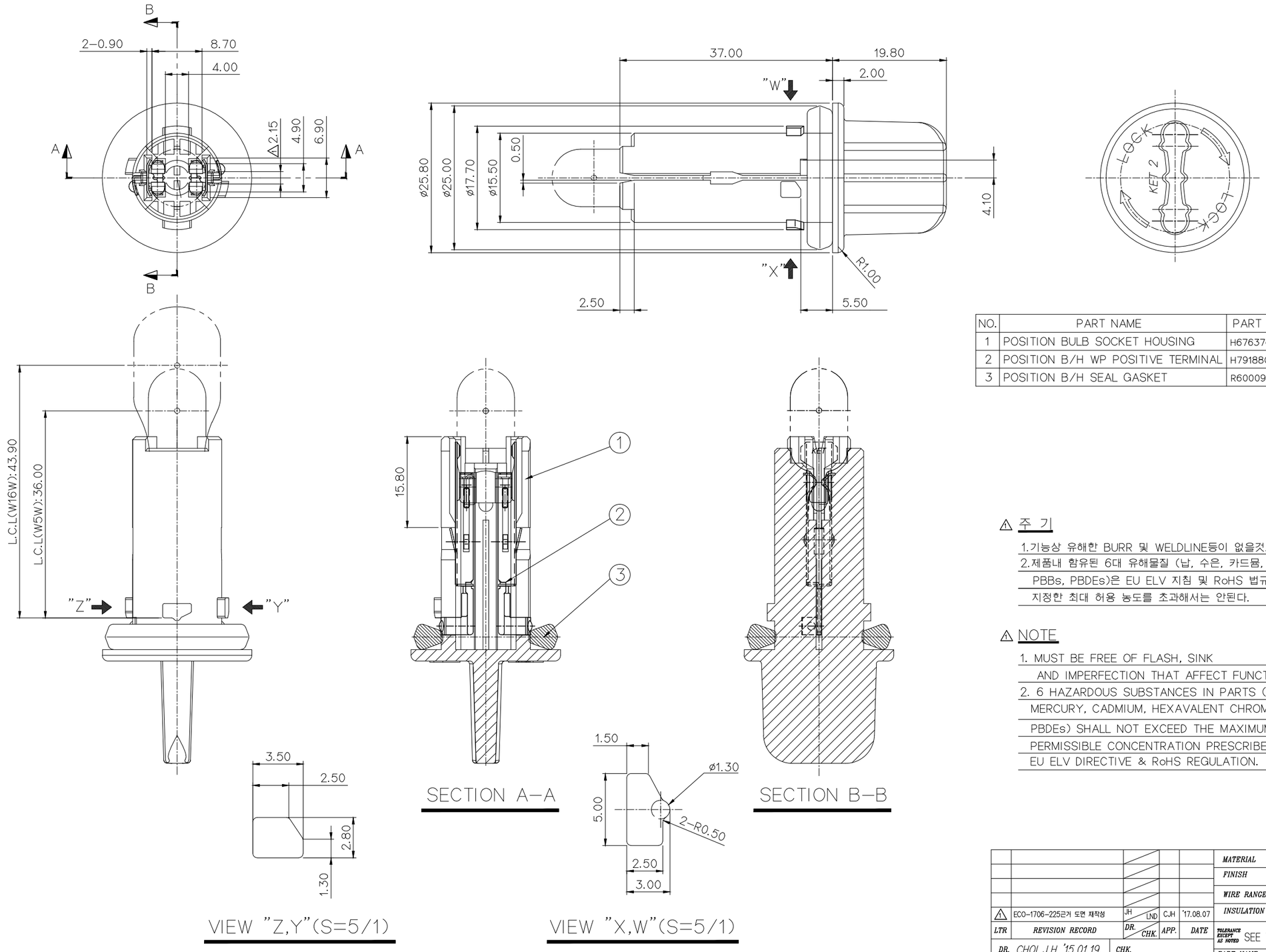

SECTION A-A

SECTION B-B

VIEW "Z,Y"(S=5/1)

VIEW "X,W"(S=5/1)

NO.	PART NAME	PART NO.	MATERIAL	QT'Y	FINISH
1	POSITION BULB SOCKET HOUSING	H676376-5	PA66+G/F15%	1	BLACK
2	POSITION B/H WP POSITIVE TERMINAL	H791880-1	COPPER ALLOY	2	UNPLATE
3	POSITION B/H SEAL GASKET	R600091-41	SILICONE	1	L-GRAY

⚠ 주 기

1.기능상 유해한 BURR 및 WELDLINE등이 없을것.
2.제품내 함유된 6대 유해물질 (납, 수은, 카드뮴, 6가크롬, PBBs, PBDEs)은 EU ELV 지침 및 RoHS 법규에서 지정한 최대 허용 농도를 초과해서는 안된다.

⚠ NOTE

1. MUST BE FREE OF FLASH, SINK AND IMPERFECTION THAT AFFECT FUNCTION.
2. 6 HAZARDOUS SUBSTANCES IN PARTS (LEAD, MERCURY, CADMIUM, HEXAVALENT CHROMIUM, PBBs, PBDEs) SHALL NOT EXCEED THE MAXIMUM PERMISSIBLE CONCENTRATION PRESCRIBED UNDER EU ELV DIRECTIVE & RoHS REGULATION.

APPROVED
2019-11-06
KOREA ELECTRIC TERMINAL CO., LTD.

ISSUE MARK

LTR	REVISION RECORD	DR. / CHK.	APP.	DATE
⚠	ECO-1706-225근거 도면 재작성	JH / LND	CJH	'17.08.07

DR. CHOI J.H '15.01.19 CHK.
CHK. SON S.H '15.01.19 APP. BIN '15.01.19

MATERIAL SEE TABLE
FINISH SEE TABLE
WIRE RANGE
INSULATION
TOLERANCE EXCEPT AS NOTED SEE TABLE
SCALE 2/1
PART NAME POSITION BULB SOCKET ASSY

KET ENGINEERED KOREA ELECTRIC TERMINAL CO., LTD.

CLASS
TYPE
PART NO. MG665803-5

(DIMENSIONS IN MM)