CUSTOMER DRAWING

PART NO. SEE TABLE

NO.	PART NO.	PART NAME	WIRE RANGE	INSULATION RANGE	A	B	C	D	E	P	WIRE BARREL			INSULATION BARREL			FINISH	2 PACKING
											WR	WH	WW	IR	IH	IW		
1	ST741372-3	N250 MALE TERMINAL(S)	AVSS0.5-0.85, AESSXF0.5-0.85, FLRY-B0.5-1.0	1.4-2.3	25.5	5.8	4.2	3.0	29.85	17.0	0.95	3.00	2.20	1.30	4.10	3.90	<PRE-TIN> Ground Cu 0.05-0.15um, (Matted) Sn 0.8-1.8um	REEL PACKING (NORMAL)
2	ST741371-3	N250 MALE TERMINAL(M)	AVSS1.25-2.0, AESSXF1.25-2.5, FLRY-B1.5-2.5	2.1-3.2	25.5	6.3	4.7	3.5	29.85	17.0	1.25	4.00	3.80	1.70	4.90	4.70	<PRE-TIN> Ground Cu 0.05-0.15um, (Matted) Sn 0.8-1.8um	REEL PACKING (NORMAL)
3	ST741370-3	N250 MALE TERMINAL(L)	AVS3.0, FLRY-B4.0	3.4-3.9	25.5	6.8	5.45	4.0	29.85	17.0	1.60	4.80	4.60	2.40	6.70	6.40	<PRE-TIN> Ground Cu 0.05-0.15um, (Matted) Sn 0.8-1.8um	REEL PACKING (NORMAL)
4	ST741370-4	N250 MALE TERMINAL(L)	AVS3.0, FLRY-B4.0 2 EEHX3.0	2 3.4-4.05	25.5	6.8	5.45	4.0	29.85	17.0	1.60	4.80	4.60	2.40	6.70	6.40	<Ag> Ground Ni 2.0-4.0um, (Matted) Ag 3.0-5.0um	REEL PACKING (NORMAL)
5	2 ST741460-4	N250 MALE TERMINAL(L)	AVS3.0, FLRY-B4.0 EEHX3.0	3.4-4.05	25.5	6.8	5.45	4.0	29.85	17.0	1.60	4.80	4.60	2.40	6.70	6.40	<Ag> Ground Ni 2.0-4.0um, (Matted) Ag 3.0-5.0um	2 REEL PACKING (VACUUM WRAPPING)
6	ST741393-3	N250 MALE TERMINAL(XL)	AVS5.0,AEXF5.0, FLRY-B6.0	4.0-4.8	25.65	7.8	6.0	4.5	29.85	17.0	1.85	5.60	5.30	2.40	7.00	6.70	<PRE-TIN> Ground Cu 0.05-0.15um, (Matted) Sn 0.8-1.8um	REEL PACKING (NORMAL)
7	ST741393-4	N250 MALE TERMINAL(XL)	AVS5.0, 2 EEHX 5.0 AEXF5.0, FLRY-B6.0	2 4.0-4.9	25.65	7.8	6.0	4.5	29.85	17.0	1.85	5.60	5.30	2.40	7.00	6.70	<Ag> Ground Ni 2.0-4.0um, (Matted) Ag 3.0-5.0um	REEL PACKING (NORMAL)
8	2 ST741459-4	N250 MALE TERMINAL(XL)	AVS5.0, EEHX 5.0 AEXF5.0, FLRY-B6.0	4.0-4.9	25.65	7.8	6.0	4.5	29.85	17.0	1.85	5.60	5.30	2.40	7.00	6.70	<Ag> Ground Ni 2.0-4.0um, (Matted) Ag 3.0-5.0um	2 REEL PACKING (VACUUM WRAPPING)

GENERAL TOLERANCE (TERMINAL)						USED ON
10 MAX	20 MAX	45 MAX	45 VR	ANGLE	ECCENT	SEE NOTE
±0.2	±0.25	±0.3	±0.5	±30'	0.1	

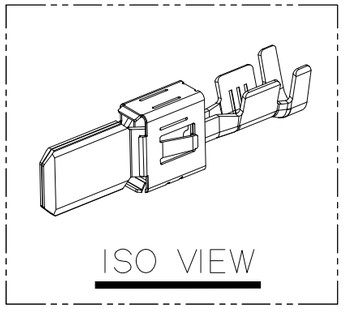

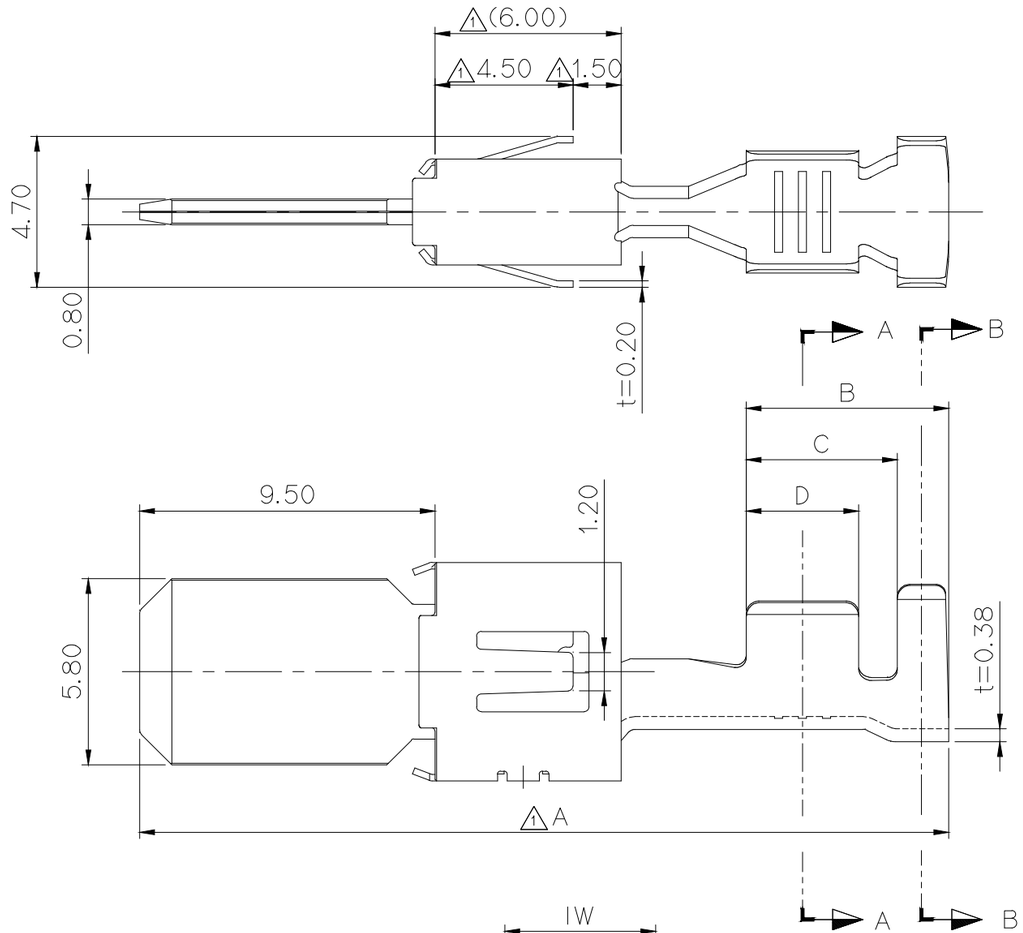

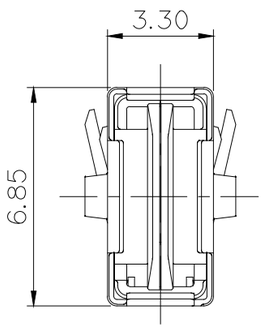

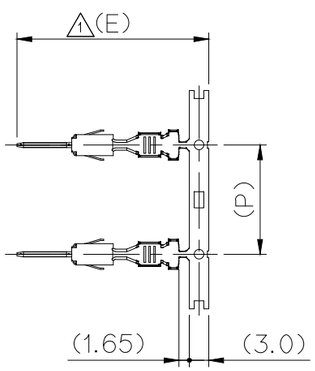

N250 MALE TML
(S= 1/1)

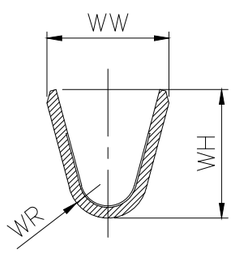

SECTION A-A

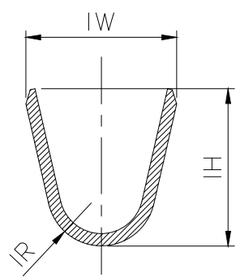

SECTION B-B

(DIMENSIONS IN MM)

주 기

1. 지시없는 C,R=0.10으로 한다.
2. 기능상 유해한 변형 및 BURR가 없을 것.
3. 적용 상대 FEMALE TERMINAL:ST731427-3(XL),ST731427-4(XL) ST731428-3(L),ST731428-4(L),ST731429-3(M),ST731430-3(S) 2 ST731570-4(L),2 ST731571-4(XL)
4. 제품내 함유된 6대 유해물질 (납, 수은, 카드뮴, 6가크롬, PBBs, PBDEs)은 EU ELV 지침 및 RoHS 법규에서 지정한 최대 허용 농도를 초과해서는 안된다.

NOTE

1. UNLESS OTHERWISE SPECIFIED ALL RADII TO BE 0.10 RADIUS AND CAMPER.
2. MUST BE FREE OF BURR AND TRANSFORM THAT AFFECT FUNCTION.
3. APPLICABLE FEMALE TERMINAL:ST731427-3(XL),ST731427-4(XL) ST731428-3(L),ST731428-4(L),ST731429-3(M),ST731430-3(S) 2 ST731570-4(L),2 ST731571-4(XL)
4. 6 HAZARDOUS SUBSTANCES IN PARTS (LEAD, MERCURY, CADMIUM, HEXAVALENT CHROMIUM, PBBs, PBDEs) SHOULD NOT EXCEED THE MAXIMUM PERMISSIBLE CONCENTRATION PRESCRIBED UNDER EU ELV DIRECTIVE & RoHS REGULATION.

APPROVED
2020-12-11
KOREA ELECTRIC TERMINAL CO., LTD.
Korea Electric Terminal Co., LTD.

ISSUE MARK

LTR	REVISION RECORD	DR.	CHK.	APP.	DATE
2	ECO-2004-014 근거 도면 작성 은도금 사양 포장사양 변경에 따른 품번 이원화	HJE		CKY	20.04.06
1	ECO-1704-132에 근거 도면 제작성	HJE	CMS	LJE	17.06.27

DR. HJE,16.12.06 CHK. WSW,16.12.06
CHK. APP. BIN,16.12.06

MATERIAL Body:Copper Alloy Cover:STS
FINISH Body:SEE TABLE Cover:NONE
WIRE RANCE SEE TABLE
INSULATION SEE TABLE
TOLERANCE EXCEPT AS NOTED SEE TABLE
SCALE 5/1
PART NAME N250 MALE TERMINAL

KET ENGINEERED KOREA ELECTRIC TERMINAL CO., LTD.
CLASS 250(630)
TYPE 비방수
PART NO. SEE TABLE

DESIGN REVISION NO.3