PRODUCTION DRAWING

PART NO. MG625459

GENERAL TOLERANCE (HOUSING)								USED ON
	10 MAX	50 MAX	100 MAX	250 MAX	250 VR	ANGLE	ECCENT	
Ⓐ	±0.15	±0.2	±0.3	±0.5	±0.75	±30°	0.1	
B	±0.2	±0.3	±0.55	±0.95	±1.4	±30°	0.1	
C	±0.3	±0.5	±0.8	±1.4	±2.0	±30°	0.15	

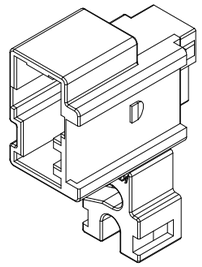

ISO VIEW

	NO.	MATERIAL	COLOR
*	0	PA66: 103 HSL	NATURAL
	1		RED
	2		BLUE
	20		JADE
	3		YELLOW
	4		GRAY
	40		DARK GRAY
	41		LIGHT GRAY
	5		BLACK
	6		DARK GREEN
	7		BROWN
	8		LIGHT GREEN
	9		MAGENTA
	11		ORANGE

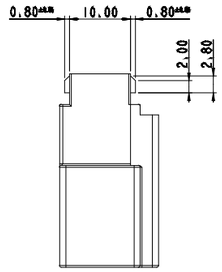

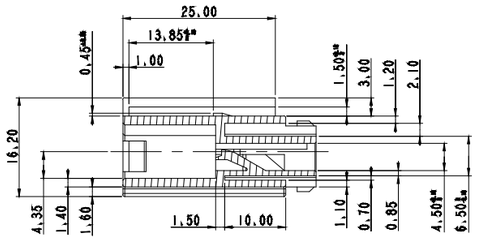

SECTION C-C

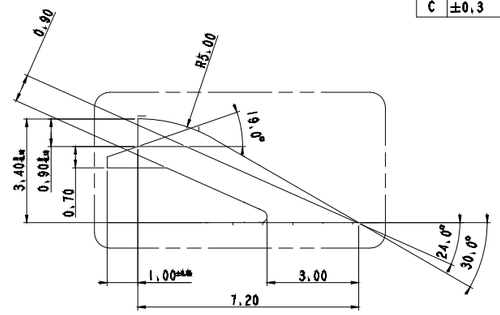

DETAIL LANCE
SCALE 10/1

주기

1. 지시하지 않은 변경 R은 0.3로 한다.
2. 지시하지 않은 모따기 C는 0.3으로 한다.
3. 기능상 유해한 BURR 및 WELDLINE 등이 없을 것.
4. 적용 TERMINAL(250) : ST740470, 471, 472
   상대물 : MG610263.
5. KET 문자 : 기울기 15°(H: 0.1~0.2, SIZE: 1.5)
   CAVITY NO. : 기울기 0°(H: 0.1~0.2, SIZE: 1.5)
6. HOUSING 표면 부식 사양: KDP-6A
7. 제품내 함유된 6대 유해물질 (납, 수은, 카드뮴, 6가크롬, PBBs, PBDEs) 은 EU ELV 지침 및 RoHS 법규에서 지정한 최대 허용 농도를 오과해서는 안된다.

NOTE

1. UNLESS OTHERWISE SPECIFIED ALL RADIUS TO BE 0.3 RADIUS.
2. UNLESS OTHERWISE SPECIFIED ALL CHAMFERS TO BE 0.3 CHAMFER.
3. MUST BE FREE OF BURR, WELDLINE AND IMPERFECTION THAT AFFECT FUNCTION.
4. APPLICABLE TERMINAL(250) : ST740470, 471, 472 MATCHING CONNECTOR : MG610263.
5. KET MARK : TAPER 15° (H: 0.1~0.2, SIZE: 1.5)
   CAVITY NO. : TAPER 0° (H: 0.1~0.2, SIZE: 1.5)
6. HOUSING ETCHING SPEC : KDP-6A
7. 6 HAZARDOUS SUBSTANCES IN PARTS (LEAD, MERCURY, CADMIUM, HEXAVALENT CHROMIUM, PBBs, PBDEs) SHALL NOT EXCEED THE MAXIMUM PERMISSIBLE CONCENTRATION PRESCRIBED UNDER EU ELV DIRECTIVE & RoHS REGULATION.

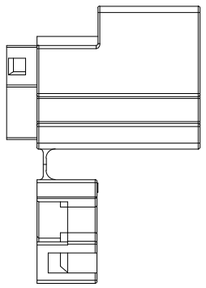

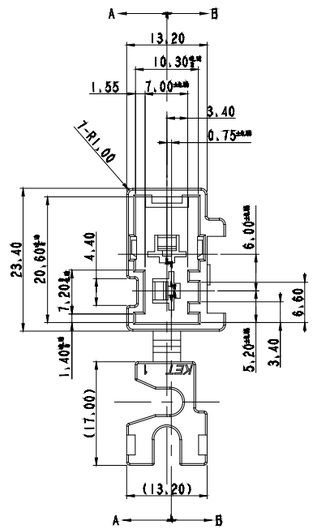

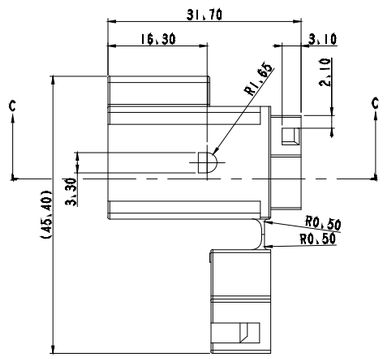

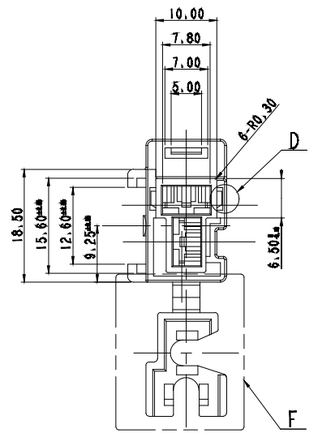

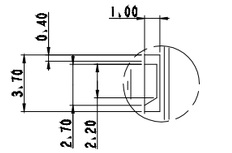

DETAIL D
SCALE 5/1

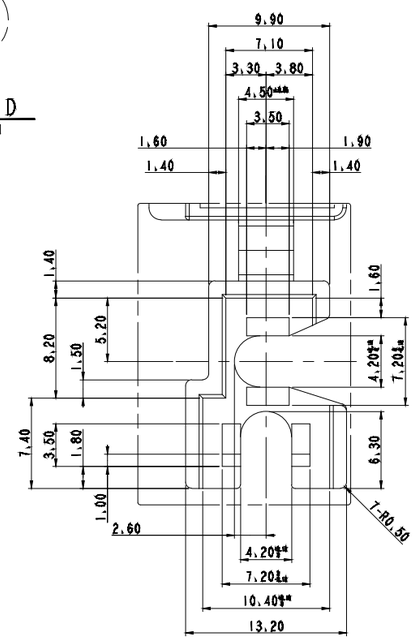

DETAIL F
SCALE 4/1

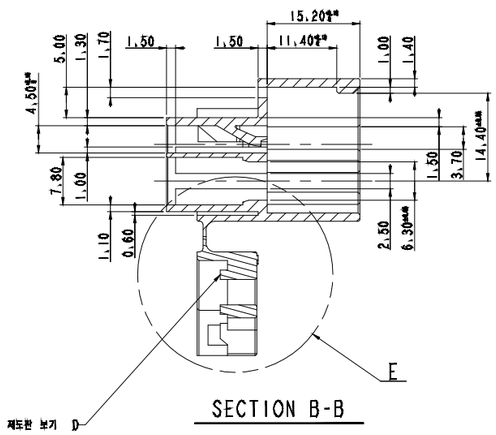

SECTION B-B

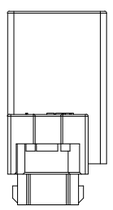

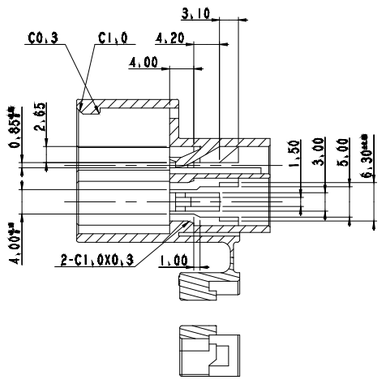

SECTION A-A

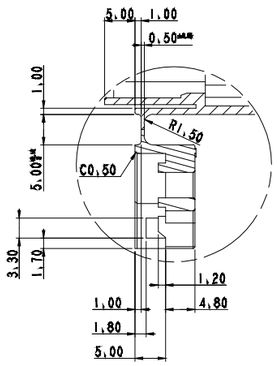

DETAIL E

APPROVED
2025-08-19
KOREA ELECTRIC TERMINAL CO., LTD.
Korea Electric Terminal Co., LTD.

DIE NO	ISSUE MARK
24134	

LTR	REVISION RECORD	DR.	CHK.	APP.	DATE
	표면 경국에 따른 도면 개작됨	KJB	KWH	SIN	2015.07.22

MATERIAL	SEE TABLE	KET ENGINEERED	KOREA ELECTRIC TERMINAL CO., LTD.
FINISH	SEE TABLE		
WIRE RANGE	-	CLASS	-
INSULATION	-	TYPE	250
TERMINAL SEE TABLE	SCALE 2/1	PART NO.	MG625459
PART NAME	250 DOUBLE LOCK 2M HOUSING		

DR. KJH 2015.02.02 CHK.
CHK. HYJ 2015.02.02 APP. LSY 2015.02.02

(D)MENSIONS IN MM

DESIGN REVISION NO. 1