PART NO. MG635942

PRODUCTION DRAWING

GENERAL TOLERANCE (HOUSING)							
	10 MAX	50 MAX	100 MAX	250 MAX	250 VR	ANGLE	ECCENT
Ⓐ	±0.15	±0.2	±0.3	±0.5	±0.75	±30′	0.1
B	±0.2	±0.3	±0.55	±0.95	±1.4	±30′	0.1
C	±0.3	±0.5	±0.8	±1.4	±2.0	±30′	0.15

USED ON

APPROVED

2025-08-19

KOREA ELECTRIC TERMINAL CO., LTD.

Korea Electric Terminal Co., LTD.

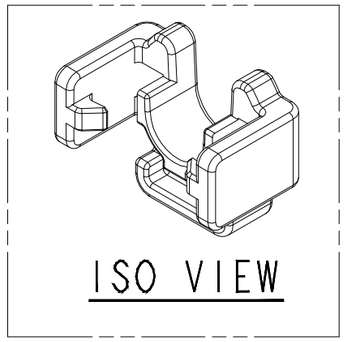

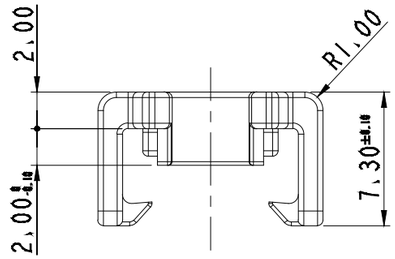

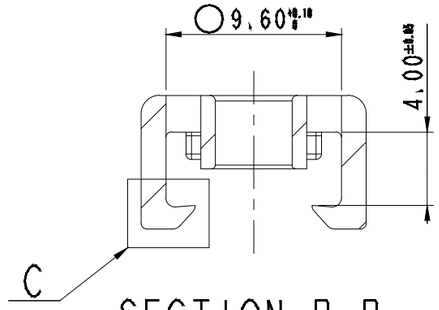



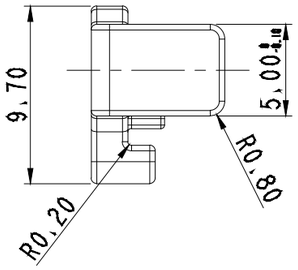

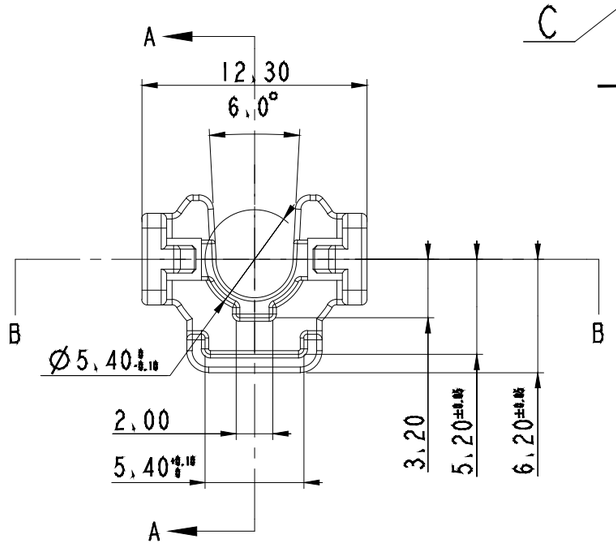

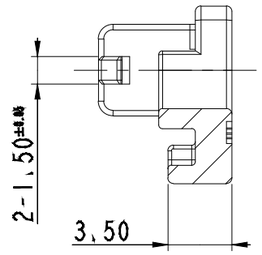

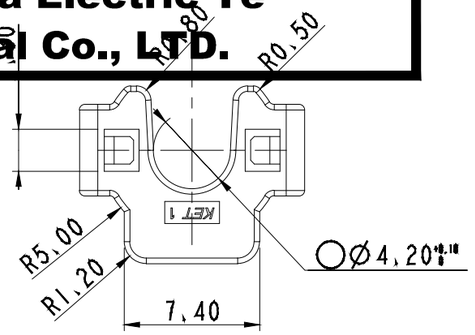

NO.	MATERIAL	COLOR
0	PA66 A217-1	NATURAL
1		RED
11		ORANGE
2		BLUE
22		JADE
3		YELLOW
4		GRAY
41		LIGHT GRAY
42		DARK GRAY
* 5		BLACK
61		LIGHT GREEN
62		DARK GREEN
7		BROWN
9		MAGENTA

NOTE
1. UNLESS OTHERWISE SPECIFIED ALL RADIUS TO BE 0.3 RADIUS.
2. UNLESS OTHERWISE SPECIFIED ALL CHAMFERS TO BE 0.3 CHAMFER.
3. MUST BE FREE OF FLASH, WELDLINE AND IMPERFECTION THAT AFFECT FUNCTION.
4. APPLICABLE HOUSING: MG646175, MG656996
5. KET MARK : TAPER 15° (H; 0.1~0.2, SIZE; 0.6)
   CAVITY NO. : TAPER 0° (H; 0.1~0.2, SIZE; 0.6)
6. '◯' IS THE IMPORTANT CONTROL DIMENSION
7. HOUSING ETCHING SPEC : KDP-6A
8. 6 HAZARDOUS SUBSTANCES IN PARTS (LEAD,MERCURY, CADMIUM,HEXAVALENT CHROMIUM,PBBs,PBDEs) SHALL NOT EXCEED THE MAXIMUM PERMISSIBLE CONCENTRATION PRESCRIBED UNDER EU ELV DIRECTIVE & RoHS REGULATION.

주기
1. 지시하지 않은 반경 R은 0.3로 한다.
2. 지시하지 않은 모따기 C는 0.3으로 한다.
3. 기능상 유해한 BURR 및 WELDLINE 등이 없을 것.
4. 적용 HOUSING: MG646175, MG656996
5. KET 문자 : 기울기 15°(H; 0.1~0.2, SIZE; 0.6)
   CAVITY NO. : 기울기 0°(H; 0.1~0.2, SIZE; 0.6)
6. '◯'는 중요관리치수임
7. HOUSING 표면 부식 사양: KDP-6A
8. 제품내 함유된 6대 유해물질 (납,수은,카드뮴,6가크롬, PBBs,PBDEs)은 EU ELV 지침 및 RoHS 법규에서 지정한 최대 허용 농도를 초과해서는 안된다.

DIE NO	ISSUE MARK
25230	

LTR	REVISION RECORD	DR.	CHK.	APP.	DATE
0	도면 허관(개발->생산) ECO-1908-391 근거 도면 제작성	YSS	WDH	CMS	'19.08.14

DR. YSS 2019.01.07 | CHK. WDH 2019.01.07
CHK. | APP. CMS 2019.01.07

MATERIAL	SEE TABLE	KET ENGINEERED	KOREA ELECTRIC TERMINAL CO., LTD.
FINISH	SEE TABLE		
WIRE RANGE	-	CLASS	비방수
INSULATION	-	TYPE	ETHERNET
TOLERANCE EXCEPT AS NOTED	SEE TABLE	SCALE 3/1	PART NO. MG635942
PART_NAME	ETHERNET REAR HOLDER		

DESIGN REVISION NO. 1

(DIMENSIONS IN MM)