CUSTOMER DRAWING

PART NO. MG666074-5

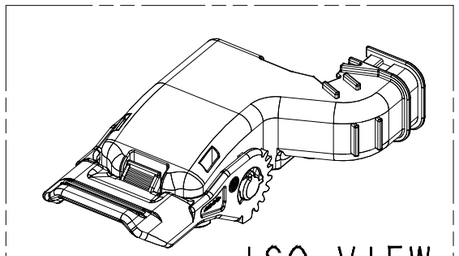

ISO VIEW

SCALE 1/2

GENERAL TOLERANCE (HOUSING)										USED ON
10 MAX	30 MAX	50 MAX	70 MAX	100 MAX	120 MAX	250 MAX	250 VR	ANGLE	ECCENT	
±0.15	±0.20	±0.30	±0.40	±0.50	±0.75	±0.90	±1.4	±30′	0.1	

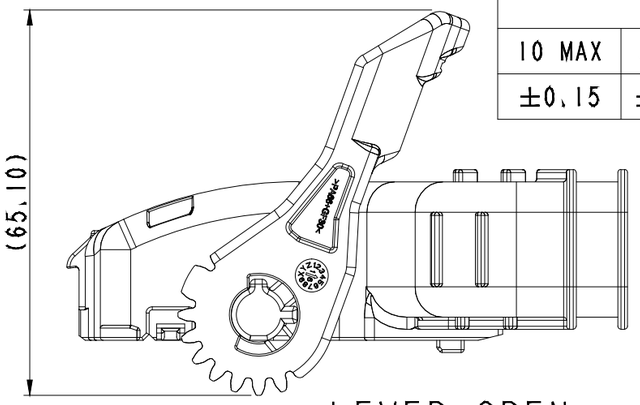

LEVER OPEN

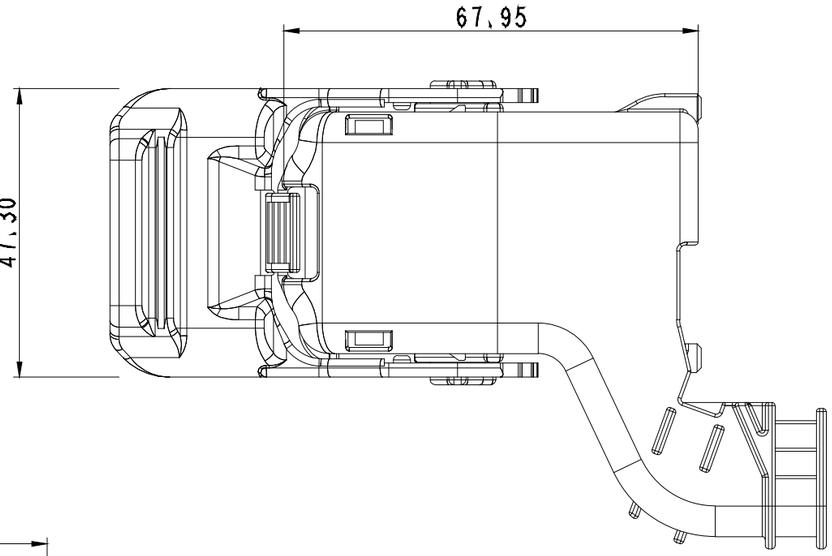

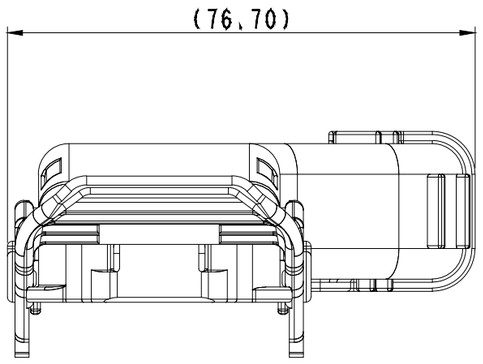

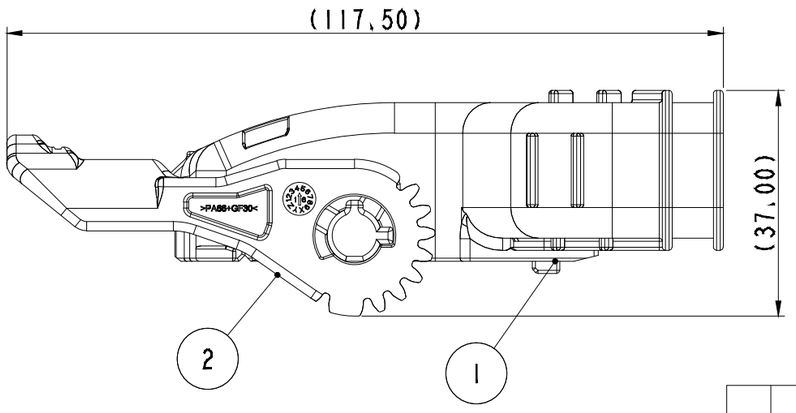

주기

1. 기능상 유해한 BURR 및 WELDLINE 등이 없을 것.
2. 상측 표면 수평 방향 COVER GRAIN STYLE : HT86-100%
   상측 표면 수직 방향 COVER GRAIN STYLE : HT86-70%
3. 제품내 함유된 10대 유해물질 (납,수은,카드뮴,6가크롬, PBBs,PBDEs, DHEP, DBP, BBP, DIBP)은 EU ELV 지침 및 RoHS 법규에서 지정한 최대 허용 농도를 초과해서는 안된다.
4. 적용 HOUSING: MG656864, MG656865, MG656926 MG656927, MG657033, MG657034

NOTE

1. MUST BE FREE OF FLASH, WELDLINE AND IMPERFECTION THAT AFFECT FUNCTION.
2. COVER HORIZONTAL SURFACE GRAIN STYLE : HT86-100% COVER VERTICAL SURFACE GRAIN STYLE : HT86-70%
3. 10 HAZARDOUS SUBSTANCES IN PARTS (LEAD,MERCURY, CADMIUM,HEXAVALENT CHROMIUM,PBBs,PBDEs,DEHP,DBP,BBP,DIBP) SHALL NOT EXCEED THE MAXIMUM PERMISSIBLE CONCENTRATION PRESCRIBED UNDER EU ELV DIRECTIVE & RoHS REGULATION.
4. APPLIABLE HOUSING : MG656864, MG656865 MG656926, MG656927, MG657033, MG657034

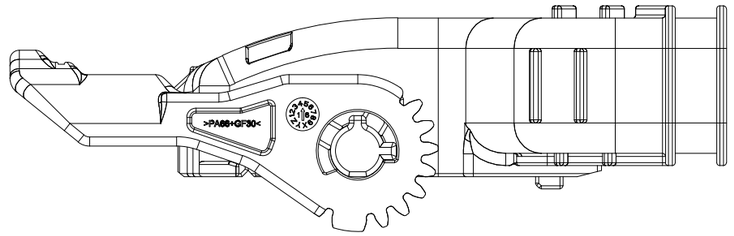

DELIVERY CONDITION

CLOSED LEVER

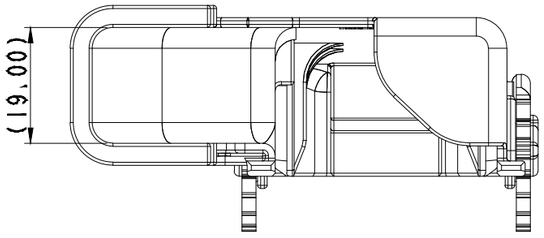

APPROVED

2021-04-02

KOREA ELECTRIC TERMINAL CO., LTD.
Korea Electric Terminal Co., LTD.

ISSUE MARK

NO	PART NAME	PART NO	MATERIAL	COLOR	QTY
1	ECU/PCU 196F COVER(K)	MG676883-5	PA66-GF30	BLACK	1EA
2	PCU N93F&N105F LEVER(B)	MG676649-5	PA66-GF30	BLACK	1EA

LTR	REVISION RECORD	DR.	CHK.	APP.	DATE

DR. KJH 2020.08.19 CHK.

CHK. NKT 2020.08.19 APP. SSH 2020.08.19

MATERIAL	SEE TABLE	KET ENGINEERED	KOREA ELECTRIC TERMINAL CO., LTD.
FINISH	SEE TABLE		
WIRE RANGE		CLASS	
INSULATION		TYPE	
TOLERANCE EXCEPT AS NOTED	SEE TABLE	SCALE 1/1	PART NO. MG666074-5
PART_NAME	PCU/ECU N93F&N105F COVER ASSY(K)		

(DIMENSIONS IN MM)