PART NO. ST710132

CUSTOMER DRAWING

(DIMENSIONS IN MM)

GENERAL TOLERANCE (TERMINAL)					USED ON
10MAX	20MAX	45MAX	ANGLE	ECCENT	ST710086
±0.2	±0.25	±0.3	±30'	0.1	

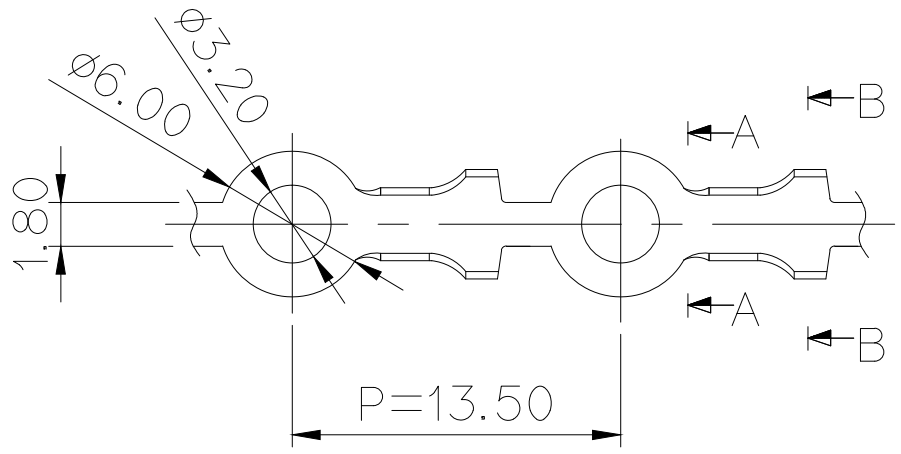

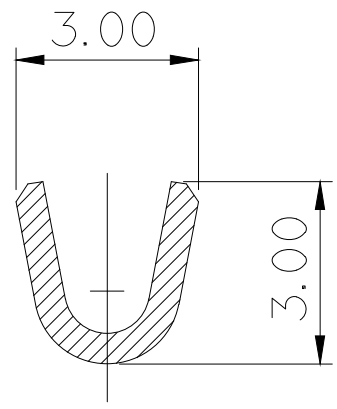

SECTION A–A

(SCALE 5:1)

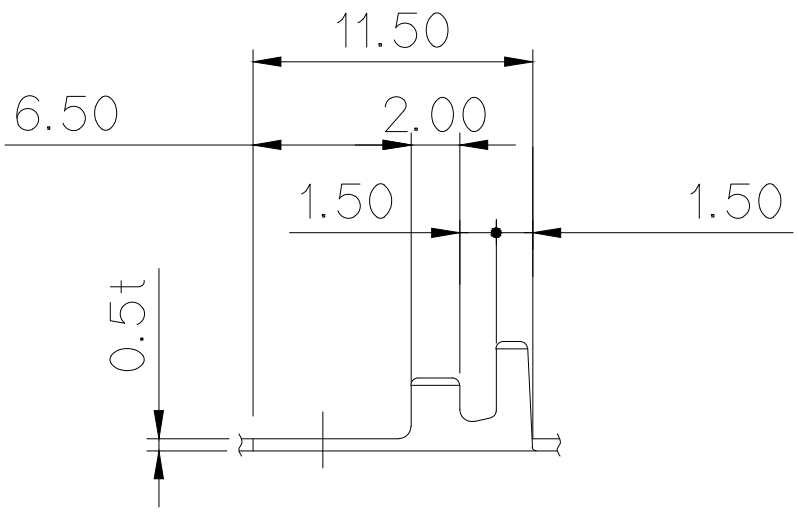

NO	MATERIAL	FINISH
1	BRASS	UNPLATE
2		TIN
3		PRE–TIN

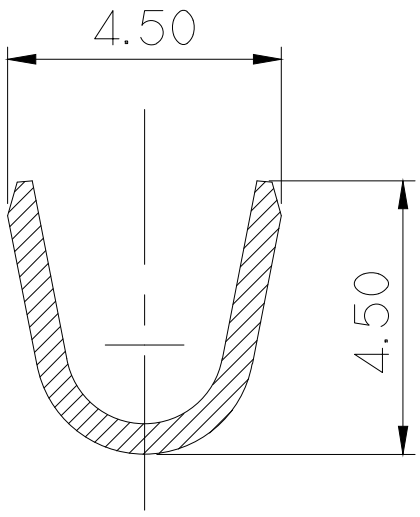

SECTION B–B

(SCALE 5:1)

주 석

1. 기능상 유해한 휨, 변형 및 BURR 등이 없을 것
2. 제품 내 함유된 6대 유해물질 (납, 수은, 카드뮴, 6가 크롬, PBBs, PBDEs)은 EU ELV 지침 및 RoHS 법규에서 지정한 최대 허용농도를 초과해서는 안 된다.

NOTE

1. MUST BE FREE OF FLASH, SINK AND IMPERFECTION
2. 6HAZARDOUS SUBSTANCES IN PARTS (Lead, Mercury, Cadmium, Hexavalent Chromium, PBBs, PBDEs) SHALL NOT EXCEED THE MAXIMUM PERMISSIBLE CONCENTRATION PRESCRIBED UNDER EU ELV DIRECTIVE & RoHS REGULATION

APPROVED

2016-03-07

KOREA ELECTRIC TERMINAL CO., LTD.
Korea Electric Terminal Co., LTD.

ISSUE MARK

LTR	REVISION RECORD	DR. / CHK.	APP.	DATE
1	설계사양변경 (S110128)근거 도면변경	KSJ		'11.04.28

DR.	'82.11.26	CHK.	
CHK.	12/1	APP.	

MATERIAL	SEE TABLE	KOREA ELECTRIC TERMINAL CO., LTD.	
FINISH	SEE TABLE		
WIRE RANGE	AWG #18	CLASS	
INSULATION	⌀2052.1 mm	TYPE	
TOLERANCE EXCEPT AS NOTED	SEE TABLE	SCALE 2/1	PART NO. ST710132
PART NAME	RING TERMINAL		